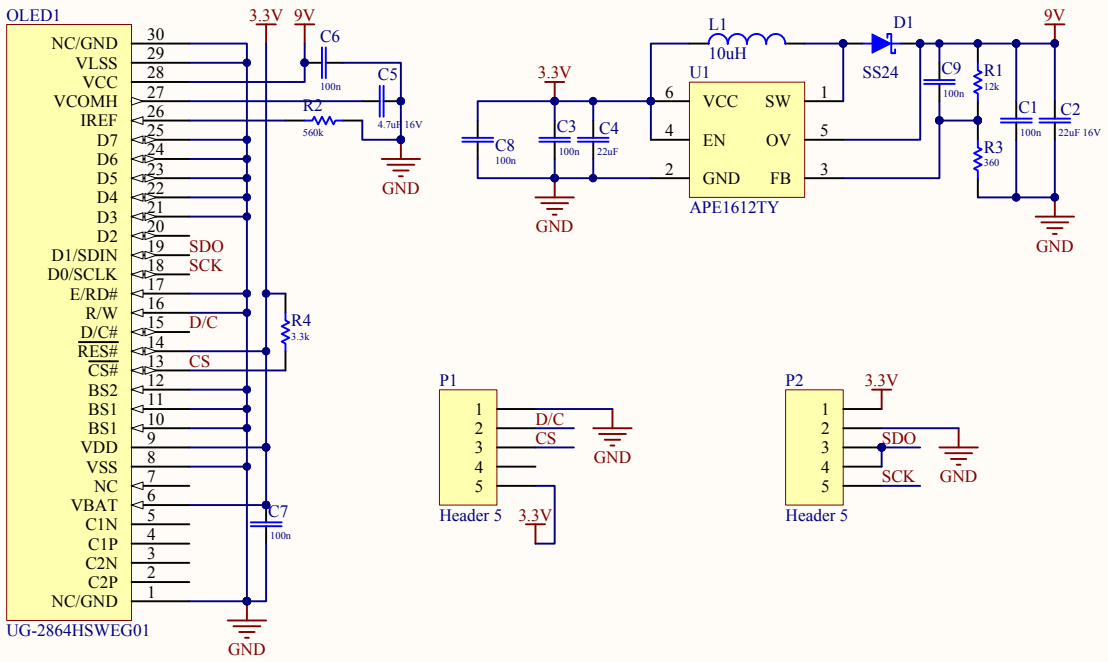

Title		
Size A4	Number	Revision
Date: 14.11.2014 r.		Sheet of
File: C:\Users\..\UniSolder_OLED.SchDoc		Drawn By: