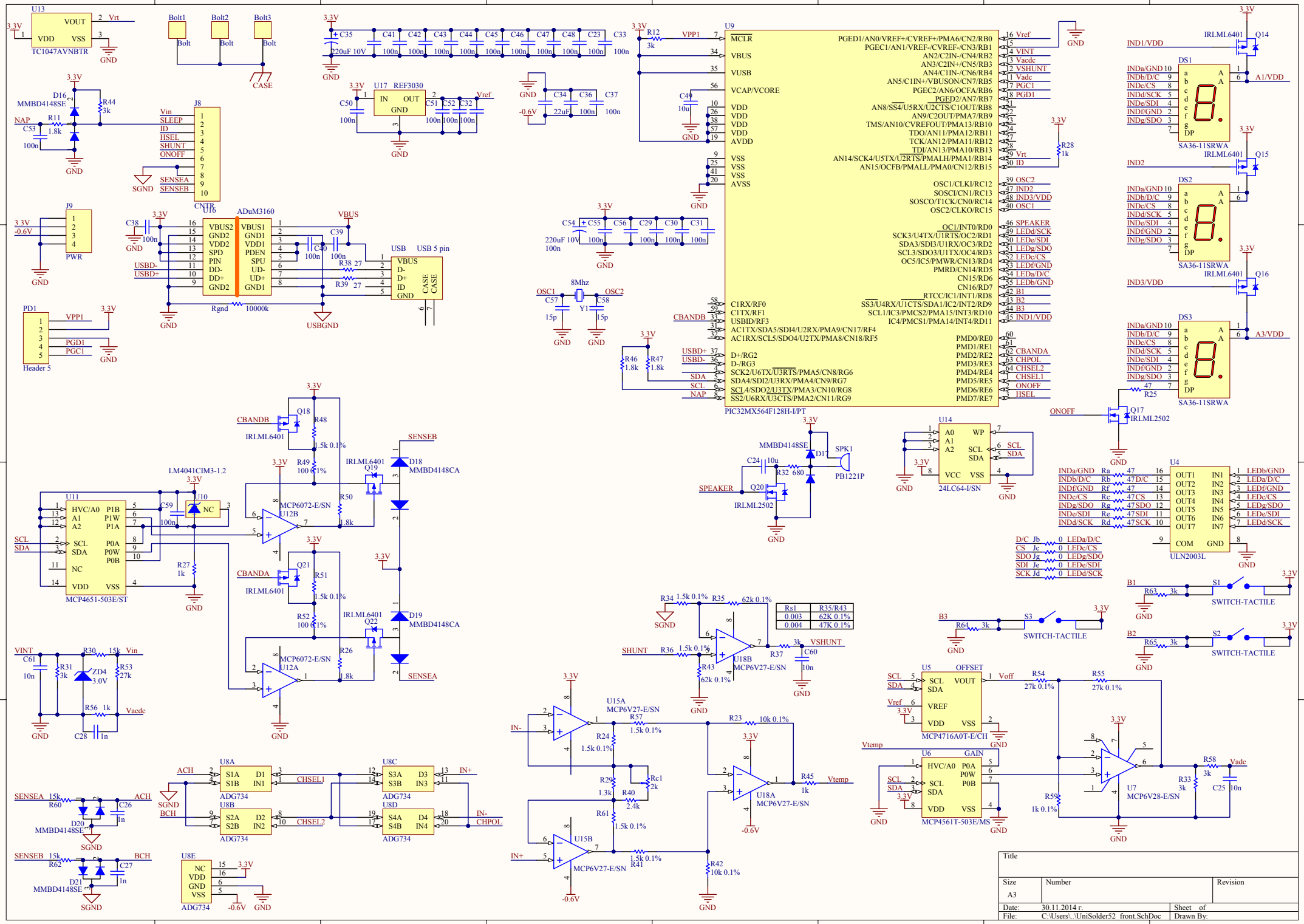
U13
TC1047AVNBTR
VOUT
VDD
VSS
Vrt
GND
3.3V
Bolt1
Bolt2
Bolt3
Bolt
CASE
C35
220uF 10V
C41 C42 C43 C44 C45 C46 C47 C48 C23 C33
100n
U17 REF3030
IN
OUT
GND
Vref
C50
C51 C52 C32
C34 C36 C37
22uF
-0.6V
D16
MMBD4148SE
R44
3k
NAP
R11
1.8k
C53
J8
Vin
SLEEP
ID
HSEL
SHUNT
ONOFF
SENSEA
SENSEB
CNTR
SGND
J9
PWR
-0.6V
U16
ADuM3160
VBUS2
GND2
VDD2
SPD
PIN
DD-
DD+
GND2
VBUS1
GND1
VDD1
PDEN
SPU
UD-
UD+
GND1
C38
C39
C40
USBD-
USBD+
R38 27
R39 27
Rgnd
10000k
USBGND
USB
USB 5 pin
VBUS
D-
D+
ID
GND
CASE
PD1
Header 5
VPP1
PGD1
PGC1
U9
PIC32MX564F128H-I/PT
MCLR
VBUS
VUSB
VCAP/VCORE
VDD
VSS
AVDD
AVSS
R12
3k
C49
10u
C54 C55 C56 C29 C30 C31
OSC1
OSC2
8Mhz
Y1
C57
C58
15p
CBANDB
USBD+
USBD-
SDA
SCL
NAP
R46 1.8k
R47 1.8k
Vref
VINT
Vacdc
VGND
VPP1
PGED1/AN0/VREF+/CVREF+/PMA6/CN2/RB0
PGEC1/AN1/VREF-/CVREF-/CN3/RB1
AN2/C2IN-/CN4/RB2
AN3/C2IN+/CN5/RB3
AN4/C1IN-/CN6/RB4
AN5/C1IN+/VBUSON/CN7/RB5
PGEC2/AN6/OCFA/RB6
PGED2/AN7/RB7
AN8/SS4/U5RX/U2CTS/C1OUT/RB8
AN9/C2OUT/PMA7/RB9
TMS/AN10/CVREFOUT/PMA13/RB10
TDO/AN11/PMA12/RB11
TCK/AN12/PMA11/RB12
TDI/AN13/PMA10/RB13
AN14/SCK4/U5TX/U2RTS/PMALH/PMA1/RB14
AN15/OCFB/PMALL/PMA0/CN12/RB15
OSC1/CLKI/RC12
SOSCI/CN1/RC13
SOSCO/T1CK/CN0/RC14
OSC2/CLKO/RC15
OC1/INT0/RD0
SCK3/U4TX/U1RTS/OC2/RD1
SDA3/SDI3/U1RX/OC3/RD2
SCL3/SDO3/U1TX/OC4/RD3
OC5/IC5/PMWR/CN13/RD4
PMRD/CN14/RD5
CN15/RD6
CN16/RD7
RTCC/IC1/INT1/RD8
SS3/U4RX/U1CTS/SDA1/IC2/INT2/RD9
SCL1/IC3/PMCS2/PMA15/INT3/RD10
IC4/PMCS1/PMA14/INT4/RD11
PMD0/RE0
PMD1/RE1
PMD2/RE2
PMD3/RE3
PMD4/RE4
PMD5/RE5
PMD6/RE6
PMD7/RE7
C1RX/RF0
C1TX/RF1
USBID/RF3
AC1TX/SDA5/SDI4/U2RX/PMA9/CN17/RF4
AC1RX/SCL5/SDO4/U2TX/PMA8/CN18/RF5
D+/RG2
D-/RG3
SCK2/U6TX/U3RTS/PMA5/CN8/RG6
SDA4/SDI2/U3RX/PMA4/CN9/RG7
SCL4/SDO2/U3TX/PMA3/CN10/RG8
SS2/U6RX/U3CTS/PMA2/CN11/RG9
VINT
VACDC
VGND
VBGND
VSHUNT
VOFF
VTEMP
IND1/VDD
IND2
IND3/VDD
A1/VDD
A3/VDD
IRLML6401
Q14
Q15
Q16
DS1
DS2
DS3
SA36-11SRWA
INDa/GND
INDb/D/C
INDc/CS
INDd/SCK
INDe/SDI
INDf/GND
INDg/SDO
R28
1k
ONOFF
Q17
IRLML2502
R25
47
U14
24LC64-I/SN
A0
A1
A2
WP
SCL
SDA
VCC
VSS
MMBD4148SE
D17
SPK1
PB1221P
C24
10u
R32 680
SPEAKER
Q20
IRLML2502
U4
ULN2003L
OUT1
OUT2
OUT3
OUT4
OUT5
OUT6
OUT7
COM
IN1
IN2
IN3
IN4
IN5
IN6
IN7
GND
LEDb/GND
LEDa/D/C
LEDf/GND
LEDc/CS
LEDg/SDO
LEDe/SDI
LEDd/SCK
D/C Jb 0 LEDa/D/C
CS Jc 0 LEDc/CS
SDO Jg 0 LEDg/SDO
SDI Je 0 LEDe/SDI
SCK Jd 0 LEDd/SCK
B1
B2
B3
R63 3k
R64 3k
R65 3k
S1
S2
S3
SWITCH-TACTILE
U11
MCP4651-503E/ST
HVC/A0
A1
A2
SCL
SDA
NC
VDD
VSS
P1B
P1W
P1A
P0A
P0W
P0B
LM4041CIM3-1.2
U10
C59
100n
R27
1k
CBANDB
CBANDA
Q18
Q21
IRLML6401
R48
R51
1.5k 0.1%
R49
100 0.1%
R52
100 0.1%
U12A
U12B
MCP6072-E/SN
R50
R26
1.8k
Q19
Q22
D18
D19
MMBD4148CA
SENSEB
SENSEA
VINT
C61
10n
R30 15k
Vin
R31
3k
ZD4
3.0V
R53
27k
R56 1k
Vacdc
C28
1n
R34 1.5k 0.1%
R35 62k 0.1%
SGND
SHUNT
R36 1.5k 0.1%
R43
62k 0.1%
U18B
MCP6V27-E/SN
R37
3k
C60
10n
Rs1 R35/R43
0.003 62K 0.1%
0.004 47K 0.1%
U15A
MCP6V27-E/SN
IN-
R57
1.5k 0.1%
R24
1.5k 0.1%
R29
1.3k
Rc1
2k
R40
2.4k
R61
1.5k 0.1%
U15B
IN+
R41
1.5k 0.1%
R23
10k 0.1%
R42
10k 0.1%
U18A
MCP6V27-E/SN
R45
1k
Vtemp
-0.6V
U5
OFFSET
VOUT
VREF
MCP4716A0T-E/CH
R54
27k 0.1%
R55
27k 0.1%
U6
GAIN
MCP4561T-503E/MS
U7
MCP6V28-E/SN
R58
3k
R33
3k
C25
10n
R59
1k 0.1%
U8A
U8B
U8C
U8D
U8E
ADG734
S1A
S1B
D1
IN1
S2A
S2B
D2
IN2
S3A
S3B
D3
IN3
S4A
S4B
D4
IN4
ACH
BCH
CHSEL1
CHSEL2
IN+
IN-
CHPOL
SENSEA 15k R60 ACH
D20
MMBD4148SE
C26
1n
SENSEB 15k R62 BCH
D21
MMBD4148SE
C27
1n
NC
VDD
GND
VSS
Title
Size
A3
Number
Revision
Date: 30.11.2014 r.
File: C:\Users\..\UniSolder52_front.SchDoc
Sheet of
Drawn By: