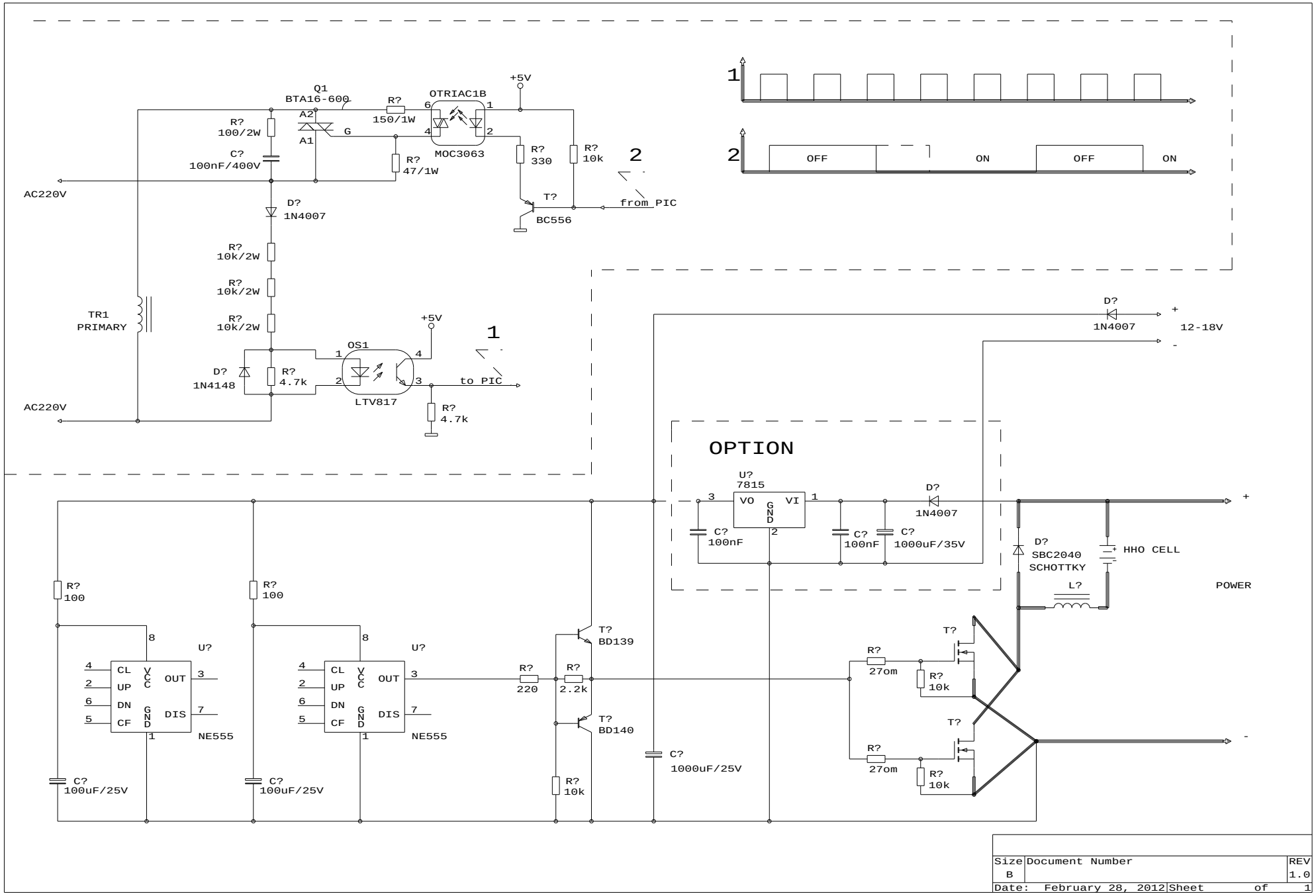

Size	Document Number	REV
B		1.0
Date: February 28, 2012	Sheet of 1	