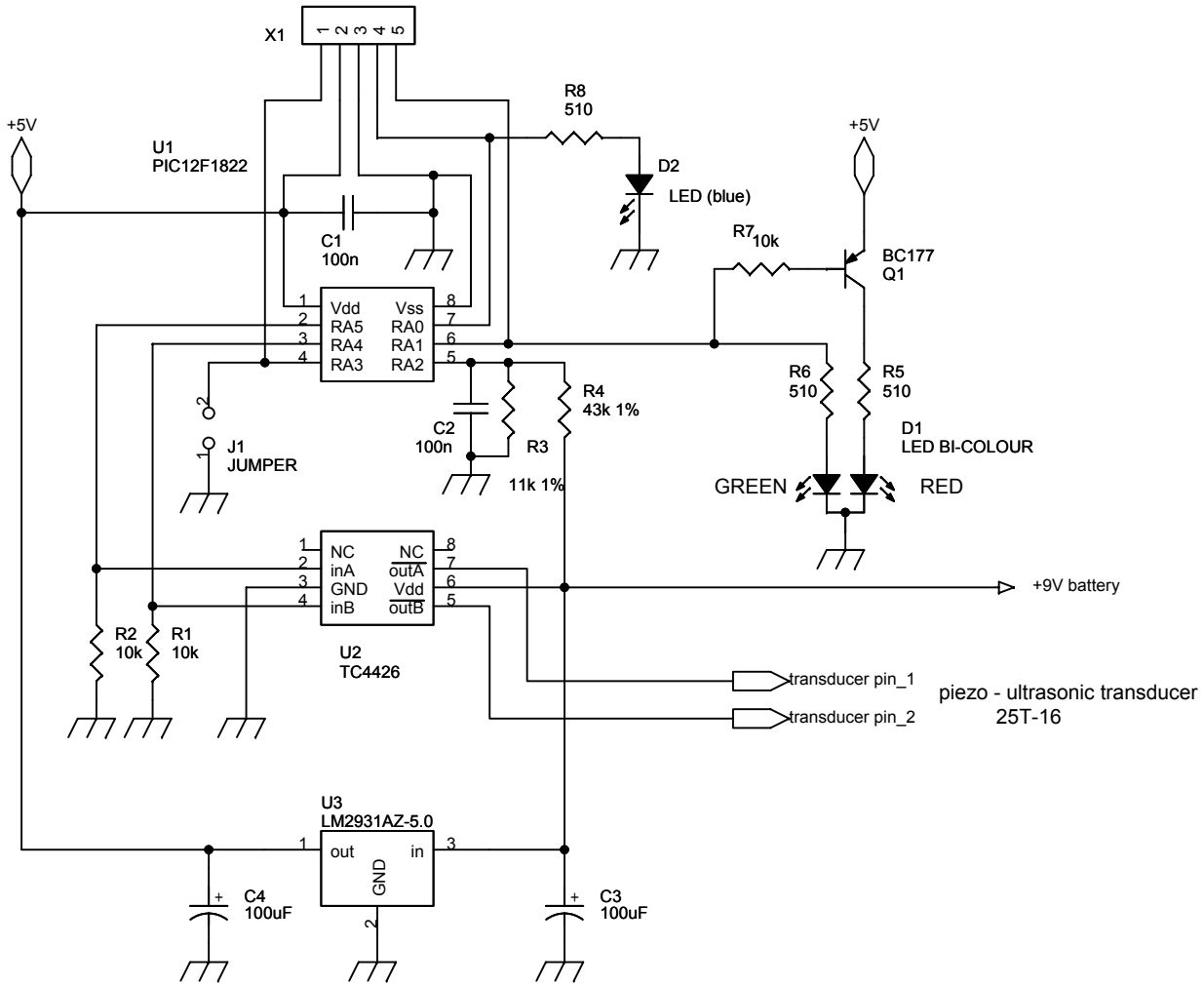

Title		
Size A4	Document Number	Rev <RevCo
Date: Tuesday, May 15, 2012	Sheet 1 of 1	