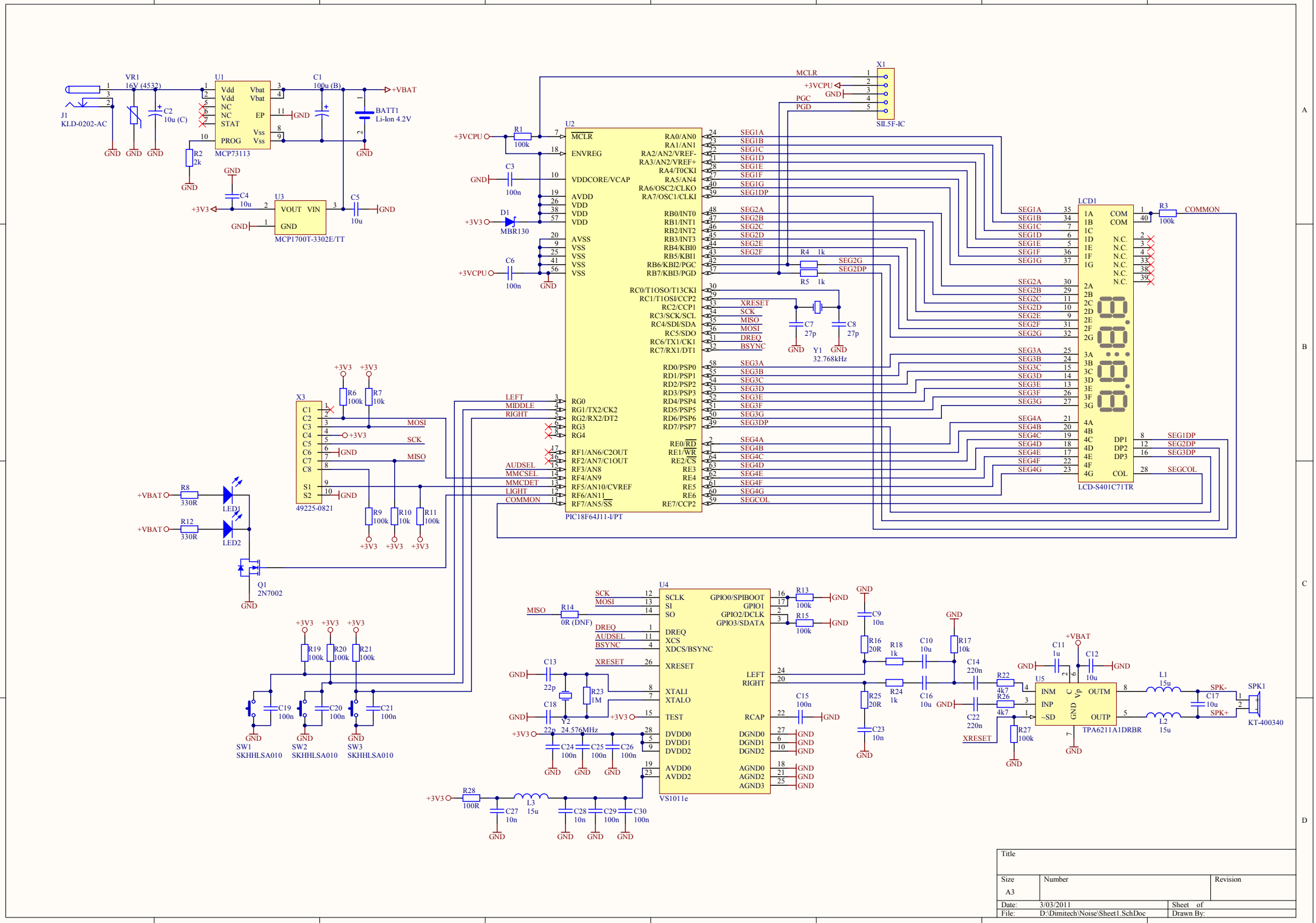

Title		
Size A3	Number	Revision
Date: 3/03/2011		Sheet of
File: D:\Dimitech\Noise\Sheet1.SchDoc		Drawn By: