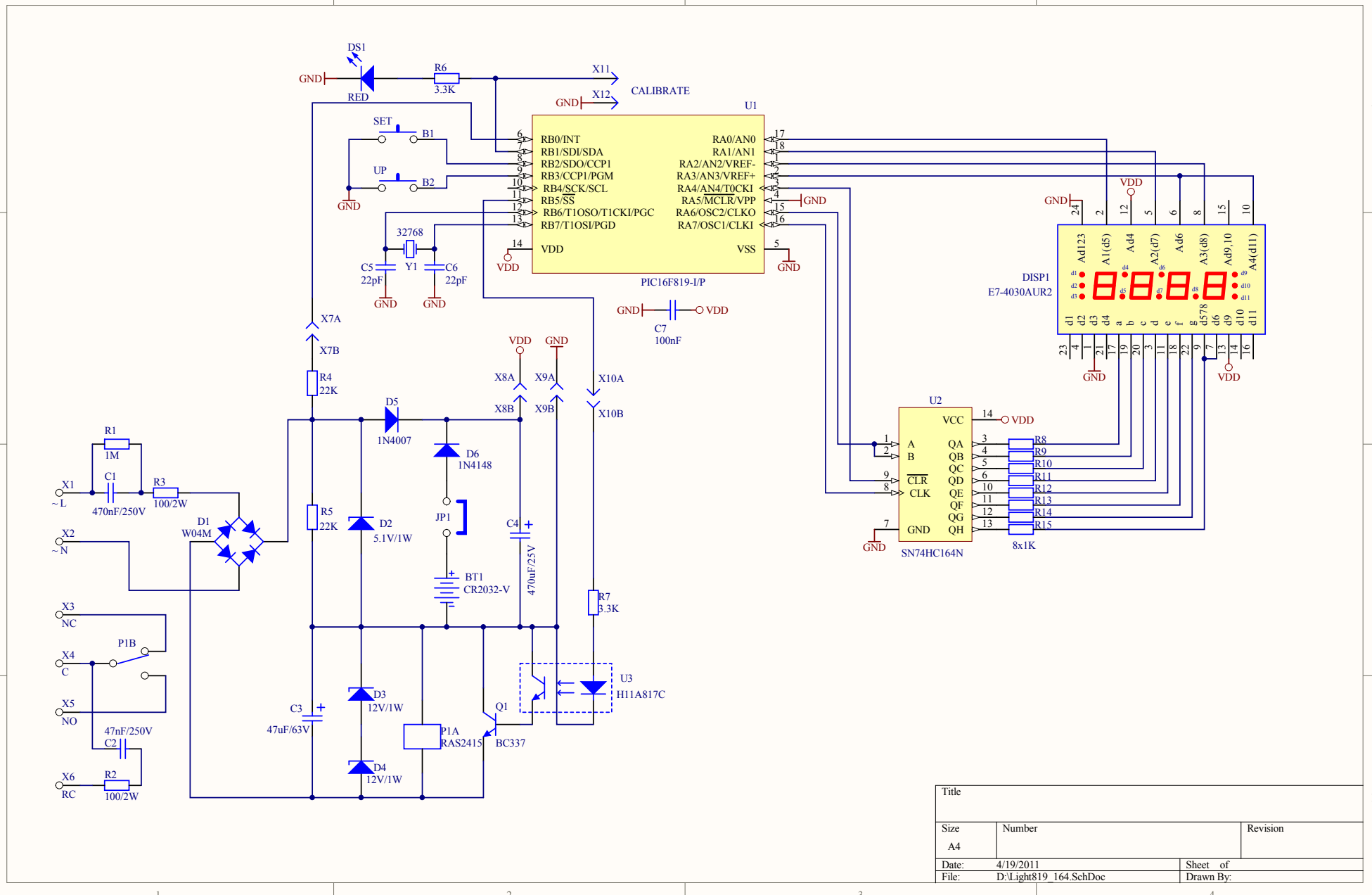
DS1
RED
GND
R6
3.3K
X11
CALIBRATE
X12
U1
SET
B1
UP
B2
RB0/INT
RB1/SDI/SDA
RB2/SDO/CCP1
RB3/CCP1/PGM
RB4/SCK/SCL
RB5/SS
RB6/T1OSO/T1CKI/PGC
RB7/T1OSI/PGD
VDD
RA0/AN0
RA1/AN1
RA2/AN2/VREF-
RA3/AN3/VREF+
RA4/AN4/T0CKI
RA5/MCLR/VPP
RA6/OSC2/CLKO
RA7/OSC1/CLKI
VSS
PIC16F819-I/P
32768
Y1
C5
22pF
C6
22pF
C7
100nF
DISP1
E7-4030AUR2
U2
VCC
A
B
CLR
CLK
GND
QA
QB
QC
QD
QE
QF
QG
QH
SN74HC164N
R8
R9
R10
R11
R12
R13
R14
R15
8x1K
X7A
X7B
R4
22K
D5
1N4007
D6
1N4148
X8A
X8B
X9A
X9B
X10A
X10B
R1
1M
C1
470nF/250V
R3
100/2W
X1
~L
X2
~N
D1
W04M
R5
22K
D2
5.1V/1W
JP1
BT1
CR2032-V
C4
470uF/25V
R7
3.3K
X3
NC
X4
C
X5
NO
P1B
47nF/250V
C2
X6
RC
R2
100/2W
C3
47uF/63V
D3
12V/1W
D4
12V/1W
P1A
RAS2415
Q1
BC337
U3
H11A817C
Title
Size
A4
Number
Revision
Date:
4/19/2011
Sheet of
File:
D:\Light819_164.SchDoc
Drawn By: