IECON 2005 Tutorial

"Grid Converters and their Control in Distributed Power Generation Systems"

Marco Liserre,

Department of Electric and Electronic Engineering

Polytechnic of Bari

Via E. Orabona 4, 70125, Bari, Italy,

email: liserre@poliba.it

Remus Teodorescu and Zhe Chen,

Institute of Energy Technology

Aalborg University

Pontoppidanstraede 101/45, 9220, Aalborg East, Denmark,
email: ret@iet.aau.dk., zhc@iet.aau.dk.

Outline of the content of the Tutorial

I. Distributed Power Generation Systems (DPGS) (speaker: Zhe Chen – 30 min)
Energy situation is discussed in respect to past situation and future trends. The need of distributed power generation is justified by both the limitations of fossil fuels in terms of sustainability and pollution and by the stability an reliability problems related to large central power plants (ex. California blackout). Renewable energy technologies are introduced with attention paid to the Kyoto Protocol and to the European Directives. Then distributed power generation systems are introduced and difference sources are briefly addressed with reference to costs and benefits. The energy potential, actual technology, development and economics of PV and WT RES is described. DPGS based on WT and PV require maximum power point trackers (MPPT) in order to maximize the yield of energy at all times.

II. Photovoltaic generation systems (speaker: Marco Liserre – 30 min)
Different power configurations for PV systems are discussed (central inverters, string inverters, module inverters, with/without dc/dc converters, with/without isolation). Different topologies for dc-dc boost converters are reviewed in view of the "max efficiency" criterion. Finally single-phase dc-ac grid inverters are reviewed (standard buck solution and innovative boost solutions). The choice of the position of current and voltage sensors is discussed in case an LCL-filter is adopted for the grid connection. The LCL-filter design is discussed.

III. Control of single-phase PV systems (speaker: Marco Liserre – 45 min)
Different control structures for single-phase PV systems are described and the blocks involved are described in detail. The issue of synchronizing is firstly addressed and different techniques like PLL and filtering are addressed. Then the quality of the current controller is emphasized as a key issue in order to ensure stability and compliance with the new stringent power quality standards like IEE 929. Both classical PI control and new P+Resonant control yielding better performacies and harmonic compensation is discussed. Next, different structures of MPPT are described and practical implementation and obtained performances are shown. Finally, the need of anti-islanding feature is explained as a safety measure for grid-connected PV inverters. The classical solution involves extra hardware. The new trend is to use software anti-island methods which need only some extra functions implemented in the existing DSP and no extra hardware. Practical implementation of an original method using non-characteristic harmonic injection is presented.

IV. Wind power generation systems (speaker: Zhe Chen – 30 min)
The most competitive renewable energy source, wind power, is detailed. The state of the art technologies of various types of wind power systems are presented. The basic power conversion topologies are introduced (fixed speed system and variable speed system). Different power converters, adopted in WT, are reviewed (two-levels and three-levels back-to-back, matrix converter, two-level inverter with boost-rectifier). The operation and control of these systems are discussed, their features are highlighted while the challenges are indicated as well. Furthermore, the requirements of interconnection of wind power systems are introduced, the power and voltage quality issues are addressed. The possible roles that the modern power electronic technology could play in meeting the challenges are discussed.

V. Control of three-phase inverters for wind systems (speaker: Marco Liserre – 45 min)
The use of different current control techniques, especially PI in synchronous frame and P-resonant in stationary frame, will be discussed with attention paid to the possible implementation of harmonic compensation and to the damping of the resonance in case of LCL-filter. The stability of these controllers for a large set of grid impedance values (for PV and WT systems) is discussed. The operation under unbalance condition or during voltage dips is discussed. Finally many synchronization and grid-monitoring algorithms will be reviewed.

All the topics will be discussed with the aid of several experimental results obtained on single-phase and three-phase prototypes present in the laboratories of the Aalborg University and of the Polytechnic of Bari.

Distributed Power Generation Systems (DPGS) and Renewable Energy Sources (RES)

Zhe Chen

Institute of Energy Technology
Aalborg University, Denmark

1

Outline

- Energy situation
- Renewable Energy Technologies
- Distributed Power Generation Systems
- Power Electronic Applications in DG Systems

2

Energy situation:

World Primary Energy Consumption, 1970-2025

3

Energy situation:

World Primary Energy Consumption
by Energy Source, 1970-2025

4

Energy situation:

World Energy-Related Carbon Dioxide Emissions by Fuel Type, 1970-2025

5

Future energy systems:

Clean, sustainable, highly efficient and reliable

Solutions:

- Energy efficiency
- Renewable energy

6

Background for DG Development

- Energy market deregulation
- Increase of Distributed Resources: Renewable Energy Source (RES) and other DG sources
- International agreements
  - Kyoto Protocol to reduce the Greenhouse effect gazes
  - European Directives to insert RES : 22% for 2010
- Obstacles to build new electric lines
- Last blackouts in the world
  - USA: August 2003 / Italy: September 2003 / Denmark &Sweden: September 2003
  - Need to maintain power quality, robustness

Conventional Central Utility

Classic System

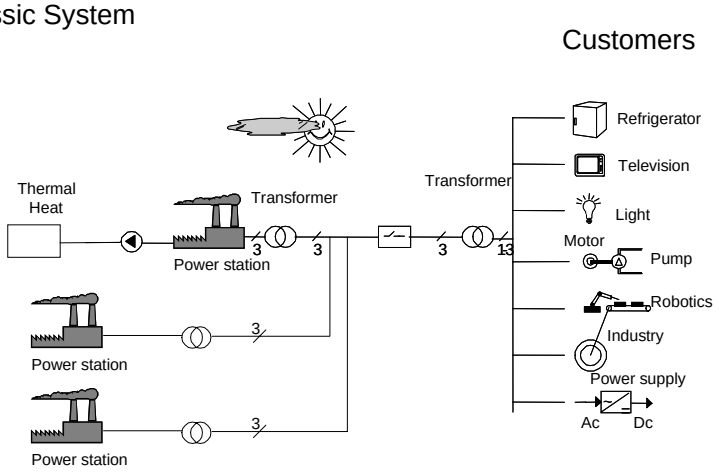

Distributed Generation (DG) Description

- Relatively small generating units and storage technologies
- Provide electric capacity and/or energy at or near consumer sites to meet specific customer needs
- Either be interconnected with the electric grid or isolated from the grid in "stand- alone"
- The location value is important to the economics and operation.

Distributed Generation System

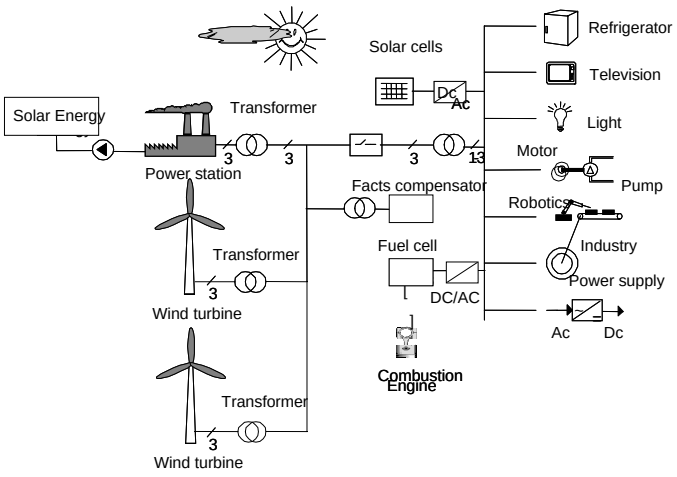

Distributed Generation (DG)

Various existing DG:

Windmills, CHP (Combined Heat and Power), PV panels, Fuel cells, energy storage systems,…

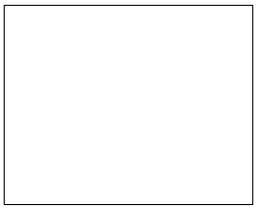

11

The cost of renewable generation

Historic Cost Curves

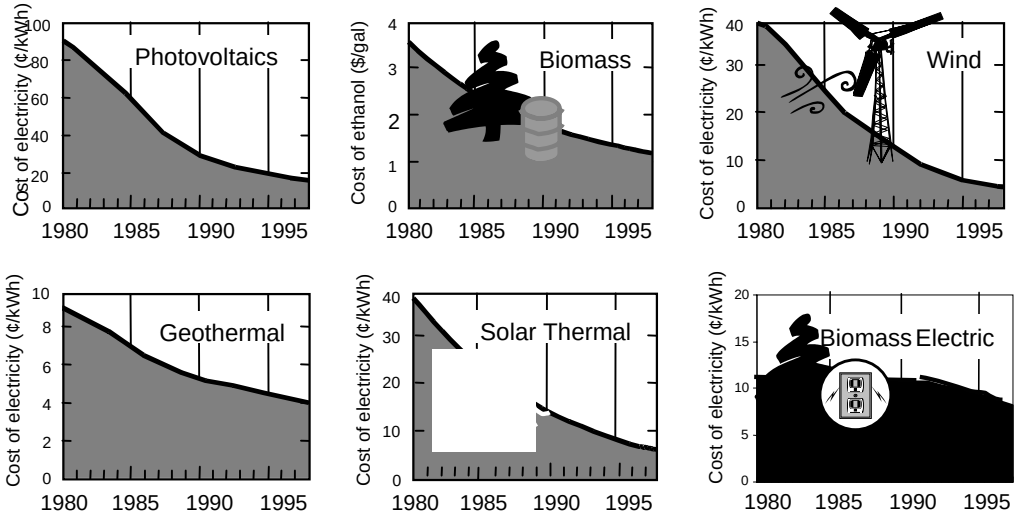

Source: Billman, Advances in Solar Energy submission, 1/8/99

12

DG Applications

- Emergency generation - historical application. Concern over changing profile.
- Combined Heat and Power - common practice by large industrials; large untapped potential in small industrial and commercial establishments
- Peaking - potential growth market for customer peak shaving (500 to 2000 hours/year) by light industrial and commercial
- Premium Power - emerging market to provide quality power to sensitive customers

13

Benefits of Distributed Generation

- Load management
- Power quality
- Fuel flexibility
- Cogeneration
- Enhanced voltage stability and reduced line losses
- Deferred or reduced T&D investment or charge
- Potential of improving distribution grid reliability/stability

14

Renewable Energy Sources

Wind

Biomass

Small Hydro

Tidal

Solar energy
photovoltaic

Wave

15

Wind Energy Development

Wind Energy Development

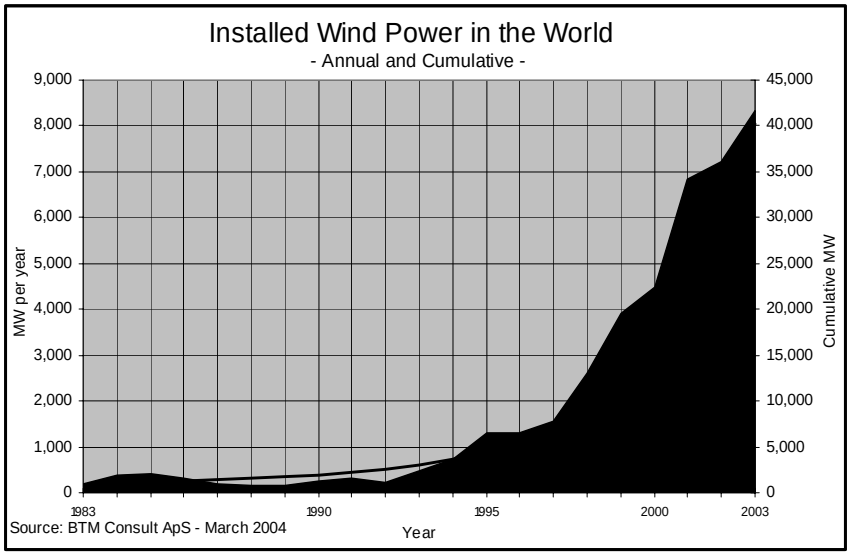

16

Wind Energy Development

Plans for Wind Power in Some European Countries

Country	Wind power in 2001 (MW)	Goal in 2010 (MW)
Germany	8.700	22.000
Netherlands	520	2.500
Italy	400	2.500
Spain	3.500	9.000
Norway	17	1.000
UK	520	6.000
France	110	5.000
Denmark	2.500	3.500 (estimate)

(Source: Risø National Laboratory, Denmark)

Power electronics: enabling technology

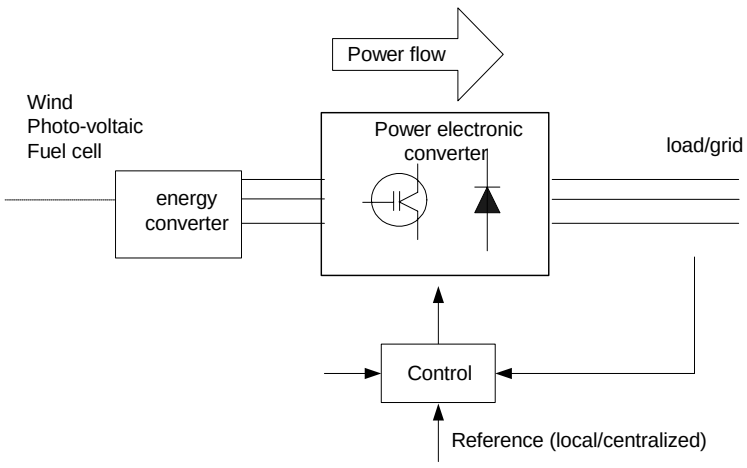

An Example of a Power Electronic Interfacing PV system

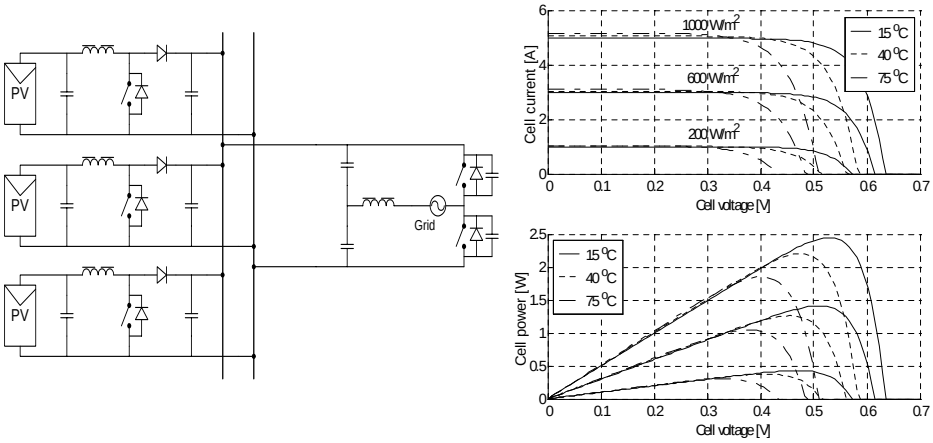

Topology of a multi-string inverter power electronics for PV system (Maximum power per string 2200 W at 150 V ~ 750 V)

19

An example of a power electronic interfacing wind turbine system

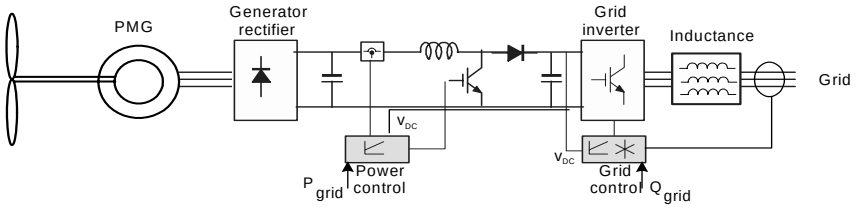

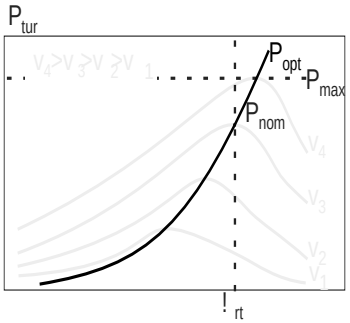

- Full speed range
- Possible to avoid gear (multi-pole generator)
- Complete control of active and reactive power
- Full scale power converter
- Multi-pole generator big and heavy

20

Power electronic control of a wind turbine

Doubly-fed induction generator system

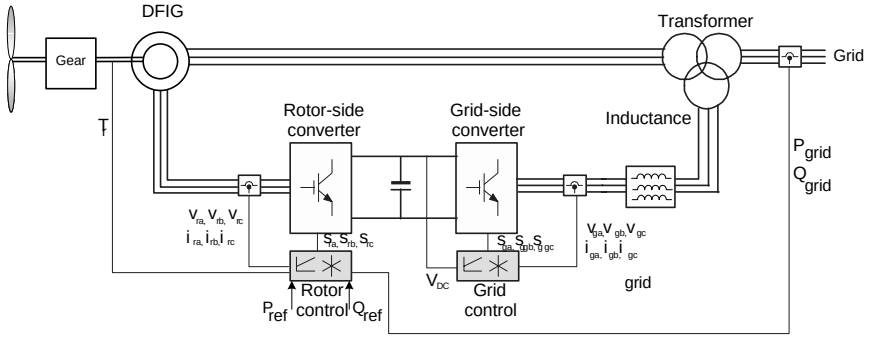

- Limited speed range (-50% to +30% around synchronous speed)
- Small-scale power converter (Less power losses, lower price)
- Complete control of active P_{ref} and reactive power Q_{ref}
- Need for slip-rings and gear

Lab-facilities at AAU

- 2.75 MW DFIG
- Access to system
- Equipped with sensing equipment
- 6 km from Campus

PV array configurations

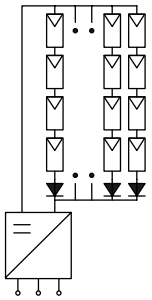

Central inverters

- >10 kW, three-phase, several strings in parallel
- high efficiency, low cost, low reliability, not optimal MPPT

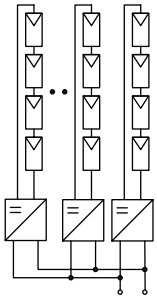

String inverters

- 1.5 . 5 kW, typical residential application
- each string has its own inverter enabling better MPPT
- the strings can have different orientations (practical!)

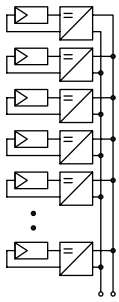

Module inverters

- 50-400W, each panel has its own inverter enabling optimal MPPT
- lower efficiency, difficult maintenance

The issues of dc-dc boost converter and isolation!

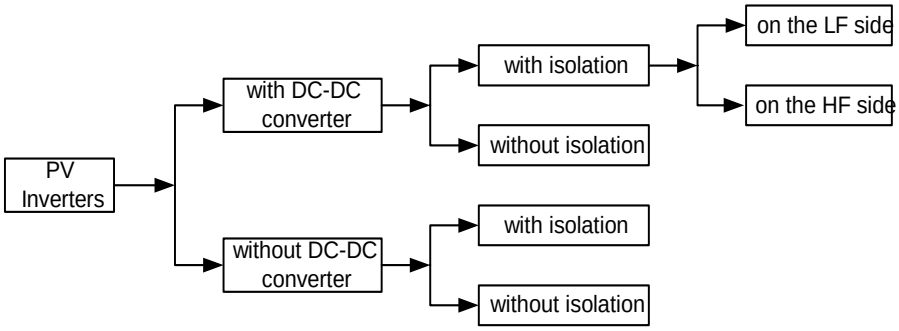

- The question of having a dc-dc converter or not is first of all related to the PV string configuration. It is possible to avoid the boost function of the dc-dc converter by using more panels in series or by having a lower grid voltage, like in US or Japan.Thus a single stage PV inverter can be used leading to higher efficiency in those cases.
- The issue of isolation from the mains is mainly related to safety standards and is for the moment only required in US. The drawback of having more panels in series is that MPPT is harder to achieve especially during partial shading

Agenda

- Power configuration for PV systems
- Topologies for dc-dc boost converters
- Single-phase dc-ac grid inverters

Need of boost converter

- In DPGS with PV or Fuel Cells, the dc voltage is typically much lower than the grid voltage and thus a boost is required
- Depending on boost factor and optimization criteria, different topologies can achieve the best results
- In the following, we consider "max efficiency" as optimization criteria and we consider three isolated topologies:
  - Full-bridge isolated boost dc-dc converter (FB) [1]
  - Single-inductor boost push-pull converter (SIC) [2]
  - Dual-inductor boost push-pull converter (DIC) [2]

PV inverters with dc-dc converter and isolation

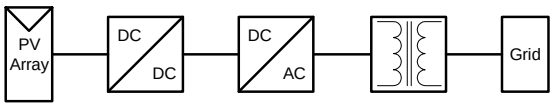

on low frequency (LF) side

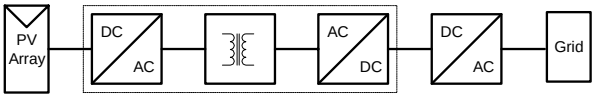

on high frequency (HF) side

- The HF transformer leads to more compact solution but complex design

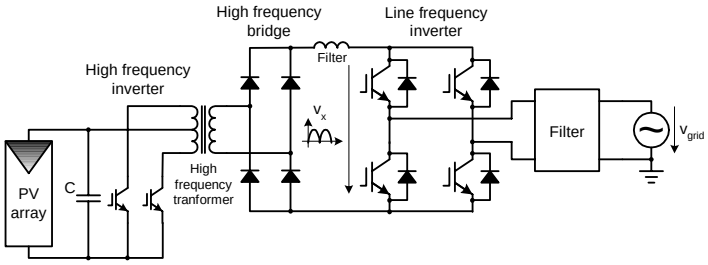

- Typical solution with push-pull dc-dc converter with HF transformer and PWM full-bridge inverter with filter

PV inverters with dc-dc co nverter without isolation

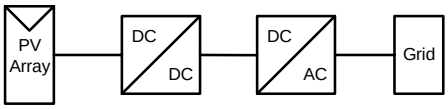

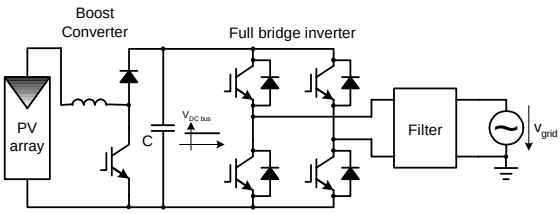

Typical example with boost dc-dc converter and PWM full-bridge inverter

Care should be taken for the leakage (earth) current that can pose safety problems when touchint the panels on the roof

Time-sharing solution using sine-wave boost chopper with a new functional diode Db and sine-wave PWM inverter working on shifts. The boost is boosting only when the required output voltage is higher than the input voltage and the inverter is running only when the required output voltage is lower than the input voltage. High efficiency >96%

PV inverters without dc-dc converter with isolation

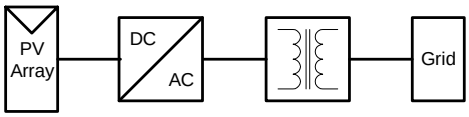

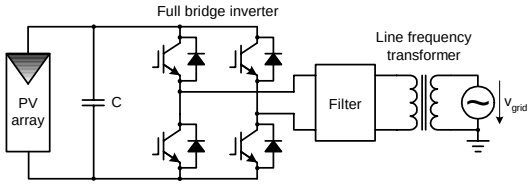

Typical example with PWM full-bridge inverter and LF trafo

Are used for high power systems where the number of panel is high enough to produce the required input dc voltage (min grid voltage peak!) at any time

- PV inverters without dc-dc converter without isolation

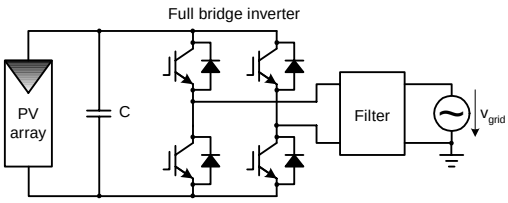

Typical solution with full-bridge inverter

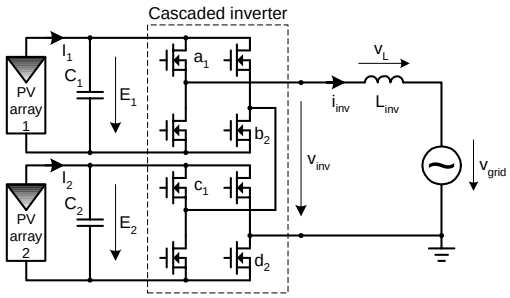

Multi-level solution for lower dc voltage input

Conclusions

- There is a large variety of power configurations for single-phase PV systems mainly dependent on power level and isolation requirements
- Dual stage ropologies are currently employed on the market for residential applications (up to 4.5kW)
- Transformerless (single-stage) topologies are becoming more and more intresting as they have a pote ntial for improving the efficiency especially in the countries where isolation is not required (Japan, Germany, etc)
- More research is needed to be done in order to minimize the leakeage current and ensure safety and panels reliability with transformerless topologies

References

[1] Ciobotaru,M., Teodorescu,R., Blaabjerg ,B., "Overview and Improved Control Strategy of the Grid-Connected Single-Phase PV Inverter Systems" – IEEE Transactions on IE, 2005 [publishing in progress]

Agenda

- Power configuration for PV systems
- Topologies for dc-dc boost converters
- Single-phase dc-ac grid inverters

Single-phase full-bridge dc-ac inverter with unipolar PWM [1]

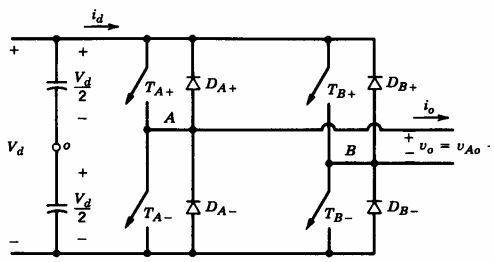

Consists of two inverter legs

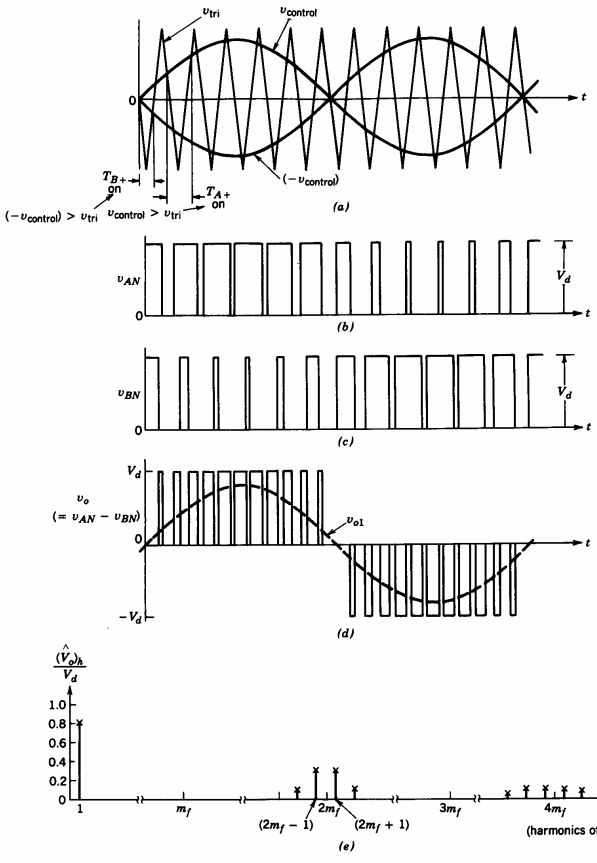

Harmonic components around the switching frequency are absent

New step-up inverter

$$\frac{\hat{v}_{AN}(s)}{\hat{d}_a(s)} \quad \frac{V_{dc}}{LC} \quad \frac{\tilde{\ } \quad 1}{s^2 \quad 2\zeta_n s Z_n^2} \quad * \quad Z$$

* obtained for the three-phase case

Full-bridge PWM inverter with current control and LCL filter

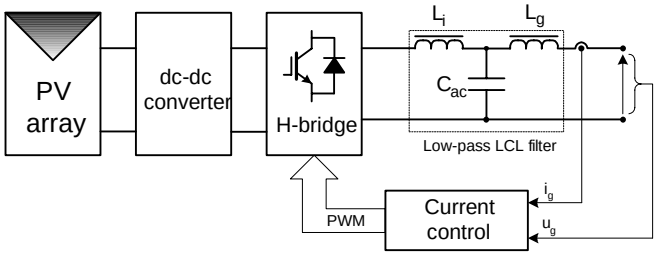

The most common topology for residential applications (1-5kW). Typically L filters are used but the new trend is to use LCL filters that have a higher order filter (3rd) which leads to a more compact design. The drawback is that due to its own resonance frequency it can produce stability problems and a special control design is required

Typically PI controllers are used for the current control but Presonant controllers provides better harmonic rejection

Unipolar PWM strategy is used in order to provide double sw. frequency spectrum

Choice of the position of current and voltage sensors

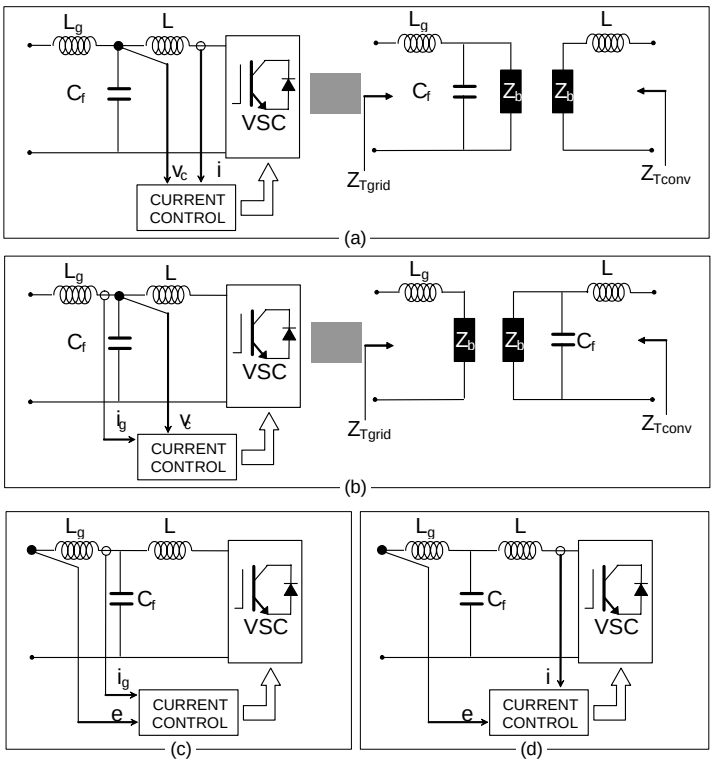

$z_{Tgrid} \quad 1 \quad j \; x_g \quad x_C$

$z_{Tconv} \quad 1 \quad jx$

$z_{Tgrid} \quad 1 \quad jx_g$

$z_{Tconv} \quad 1 \quad j \; x \quad x_C$

(c) $z_{Tgrid} \quad 1$

$z_{Tconv} \quad 1 \quad j \; x \quad x_g \quad x_c$

(d) $z_{Tgrid} \quad 1 \quad j \quad x_C$

$z_{Tconv} \quad 1 \quad j \quad x$

Design of LCL filter

Current ripple in the inverter-side inductor L_i

$$i_i'(x) = \frac{'i_i(x)}{\frac{U_{dc} \; T_s}{2L_i}} \quad 1 \quad m \sin(\quad t) \quad \sin(\quad t)$$

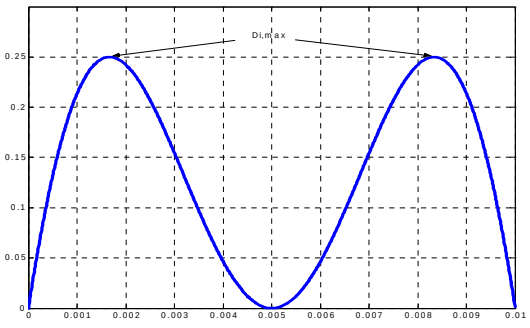

- The inductor side inductor L_i is first determined by limiting the max. current ripple at a certain value for a given dc voltage and switching frequency.
- Knowing the maximum ripple, the peak current can be calculated and used for the choice of the IGBTs, design of the current protection and design of $L_i$magnetics

Design of LCL filter

Ripple attenuation in the L_g-C_f filter

$$\frac{i_g(s)}{i_i(s)} \quad \frac{1}{1 \quad C_f \quad L_g \quad s^2} \sim \qquad \sim$$

i_i

i_g

- C_f is then sized such as the reactive power produced not to exceed 5% of the rated [kVA]
- Then, the product $L_g C_f$ is determined by designing the L_g-C_f LP filter to exhibit a significant attenuation at the switching frequency (ex 20 dB).
- Finally, the L_g is determined.

Calculation of the minimum passive damping

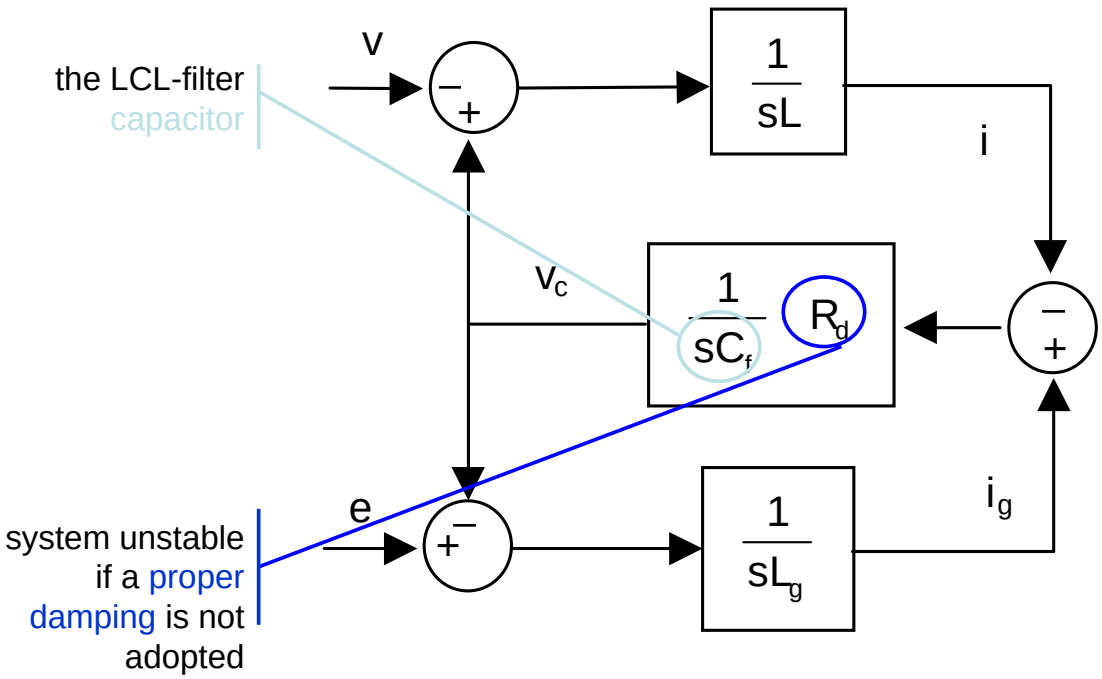

Calculation of the minimum passive damping

if the current is sensed on the grid side . . .

$$G(s) \quad \frac{i_g(s)}{v(s)} \quad \frac{1}{LL_g C_f} \; \frac{s}{s^2 \quad \omega_{res}^2}$$

undamped plant

$$G(s) \quad \frac{i_g(s)}{v(s)} \quad \frac{1}{LL_g C_f} \; \frac{C_f R_d s \quad 1}{s^2 \quad \omega_{res}^2 C_f R_d s \quad \omega_{res}^2}$$

passively damped plant

ω_{res}

$$G_1 \; s \quad \frac{i_g(s)}{i(s)} \quad \frac{C_f R_d s \quad 1}{L_g C_f s^2 \quad C_f R_d s \quad 1}$$

used to caclulate LCL-filter ripple attenuation

$$G_2 \; s \quad \frac{i_c(s)}{v(s)} \quad \frac{s}{L} \; \frac{1}{s^2 \quad \omega_{res}^2 C_f R_d s \quad \omega_{res}^2}$$

to calculate the damping losses

ω_{res}

Optimization procedure

Parameters

- the current controller proportional gain kp;
- the sampling frequency fsampling ;
- the damping resistor value Rd.

Goals

a) for the stability ω_{MAX} - maximum radius of poles of the current closed loop - ω_{MAX} should be at least < 1 in order to have a stable current loop;
b) for the bandwidth: bw – the lowest between the frequencies at which the gain of the closed loop is reduced to 3 dB and at which the phase delay becomes larger than 45°;
c) for the LCL-filter switching ripple attenuation: r_a – it can be calculated on the basis of $G_2(s)$;
d) for the damping losses: P_d – they can be calculated using $G_1(s)$ since they depend on the square of the LCL-filter capacitor C_f rms current.

Conclusions

- The full-bridge PWM inverter is the most typical topology for the single-phase grid inverters for DPGS (proven technology)
- Unipolar PWM is used to ensure lower switching ripple and thus lower filtering requirements on the output
- LCL filters are more and more used as they lead to higher compactness when compared with equivalent L filters
- Current-controlled VSI is the typical control method used
- The choice of the sensors position and of the values of the LCL-filter parameters is a key point
- Single-phase new step-up converters based on boost dc/dc converters are an in interesting alternative with some advantages:
  - it does not need reverse voltage blocking diodes

  and disadvantages:
  - low frequency resonance
  - big ripple in the input inductor and dc component in the output capacitors

References

[1] Mohan, N., Undeland, T., Robbins, P.W., Power Electronics. Converters , Applications and Design., John Wiley & Sons, 2003, ISBN:0471226939

[2] B.K. Bose, Modern Power Electronics and A.C. Drives, 1st ed., Prentice Hall, 2001, ISBN 0- 13-016743.

[3] M. Liserre, F. Blaabjerg, A. Dell'Aquila, "Step-by-step design procedure for a grid-connected three-phase PWM Voltage Source Converter" International Journals of Electronics, Vol. 91, Agosto 2004, pp. 445-460.

[4] M. Liserre, A. Dell'Aquila, F. Blaabjerg, R. Teodorescu"A stable three-phase LCL-filter based active rectifier without damping", IAS 2003, Salt Lake City, Utah, USA, October 2003.

[5] R.O. Caceres and I. Barbi, "A boost DC-AC converter: analysis, design, and experimentation" IEEE Transactions on Pow. Electron.s, vol. 14, no. 1, January, 1999, pp. 134-141.

Control of Single-Phase PV Systems

By Remus Teodorescu, Aalborg University

Agenda

- Control structures for single-phase PV systems
- Grid synchronization and monitoring
- Current control design
- MPPT strategies
- Anti-islanding strategies

Objectives

- Control structures for PV inverters with dc-dc converter
- Control structures for PV inverters without dc-dc converter
- Practical implementation
- dq control
- Conclusions
- Reference papers

Topologies with dc-dc converter (dual-stage)

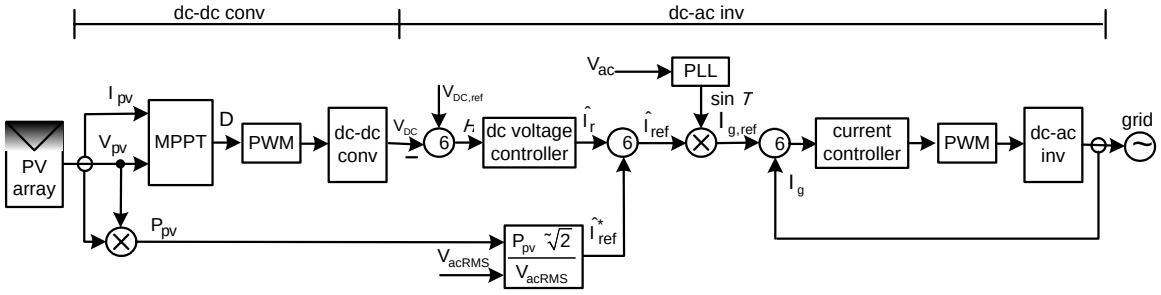

- In these topologies, which are the classical solution used by the industry at the moment, the MPPT is implemented in the dc-dc boost converter.
- The output of the MPPT is the duty-cycle function. As the dc-link voltage V_{DC} is controlled in the dc-ac inverter the change of the duty-cycle will change voltage at the output of the PV panels, V_{PV} as:

$$V_{DC} \quad K\frac{V_{PV}}{1 \quad D}$$

- The dc-ac inverter is a typical current regulated voltage source inverter (VSI) with unipolar PWM and dc-voltage controller.
- The power feedforward requires communication between the two stages and improves the dynamics of MPPT

Topologies without dc-dc converter (single-stage)

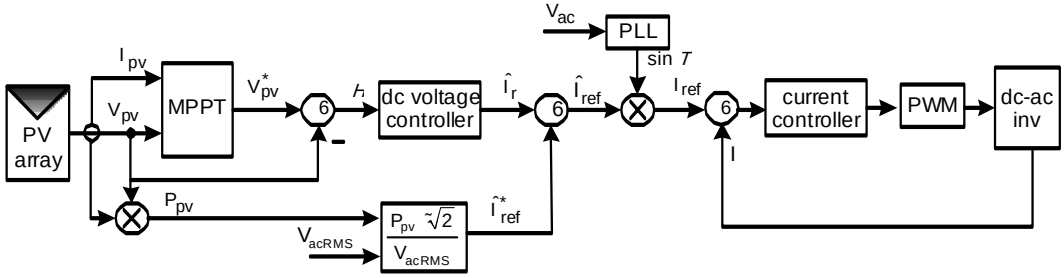

- In these topologies -which are becoming more and more popular in countries with low grid voltage (120V) like Japan and thus the voltage from the PV array is high enough- the MPPT is implemented in the dc-ac inverter
- The output of the MPPT is the dc-voltage reference. The output of the dc-voltage controller is the grid current reference amplitude. The power feedforward improves the dynamic response as MPPT runs at a slow sampling frequencies (typ. 1 Hz).
- A PLL is used to synchronize the current reference with the grid voltage

MPPT implementation in PV converters without dc-dc converter

The output of the MPPT is the ac current reference amplitude which is multiplied by sin $\mathcal{T}$ captured from a phase-looked-loop (PLL) circuit to produce the output current reference command I_{ref} of the inverter in synchronism with the grid voltage.

The output variable of the algorithm is the dc voltage reference (V^*_{pv}). A PI controller is used to control the dc voltage loop. The output of dc voltage controller is the ac current amplitude reference.

Using the input power feed-forward the dynamic of the PV system is improved being known the fact that the MPPT is rather slow

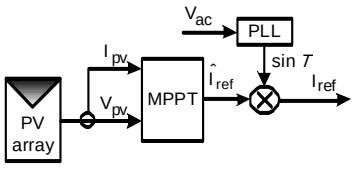

A – Controlling directly the ac current amplitude reference

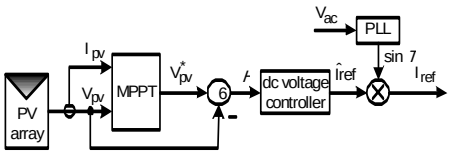

B – Controlling the DC voltage

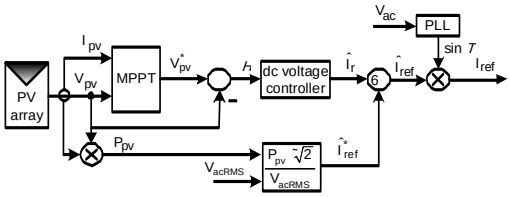

C – Controlling the DC voltage with power feedforward

Practical PV inverter control implementation

Single-stage full-bridge PWM inverter with LCL filter and grid trafo

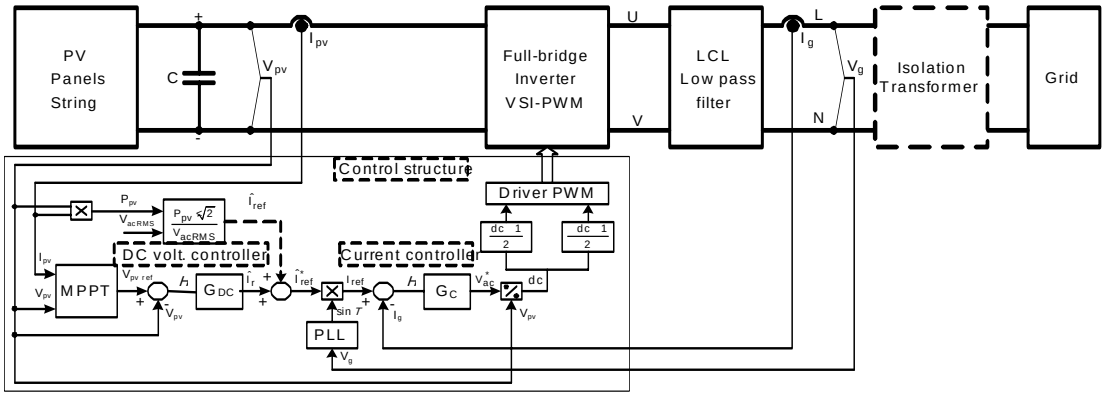

- The current controller Gc can be of type PI or PR (Proportional Resonant)
- Other non-linear controllers like hysteresis or predictive control can be used for current control
- The dc voltage controller can be P type due to the integration effect of the typical large capacitor

Practical PV inverter control implementation

Dual-stage full-bridge PWM inverter with LCL filter and grid trafo

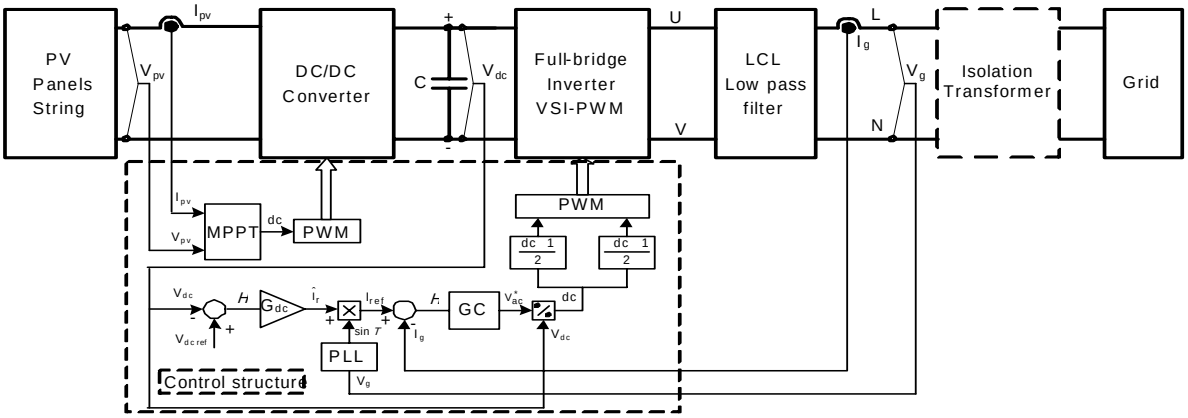

- The dc-dc controller can have isolation (high frequency trafo) and so there is no need for output trafo!
- This is the current typical industrial solution for residential PV inverters up to 4.5 kW

Control of dc-ac single-phase grid converters

dq Control of Single-Phase PV inverter

Single-stage full-bridge PWM inverter with LCL filter and grid trafo

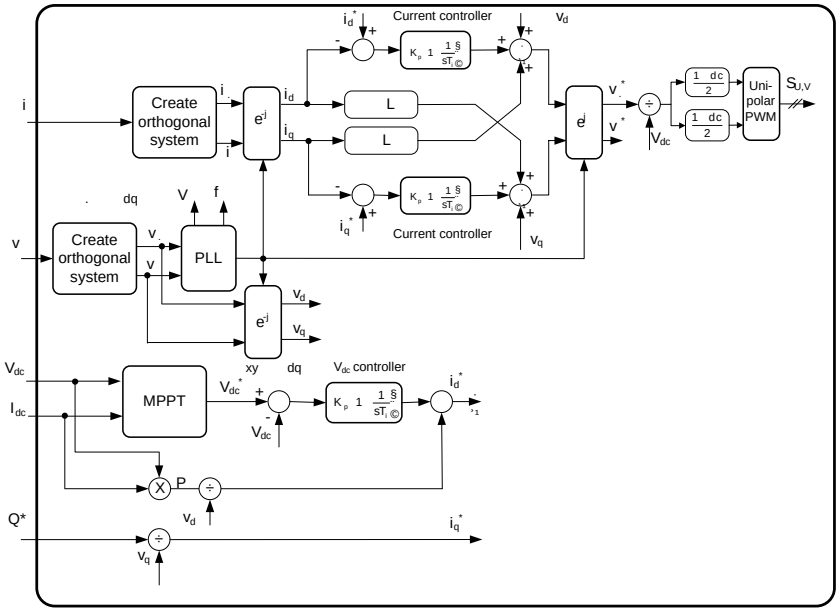

- Creating "virtual" orthogonal components of current and voltage, the well-known dq-control structure can be applied to single-phase PV inverters
- The advantage is that well-proven PI controllers can be used as dc variables are to be controlled and an independent Q control is achieved

Conclusions

- The most typical control structure for single-phase grid-connected PV inverters is the current controlled voltage source inverter with LCL filter
- For systems that require dc voltage boost an additional stage of boost dc-dc converter is used
- The MPPT is a necessary feature in order to extract the maximum power from a panel array at any conditions of irradiation and temperature. According to the topology (dual- or single-stage) the MPPT is implemented in the dc-dc converter or in the dc-ac inverter
- Different types of current control can be used like for example PI, PR, dq or hysteresis.
- Dq control si also possible by creating ”virtual” orthogonal components leading to independant Q control
- For grid synchronization PLL are typically used.

References

[1] Ciobotaru,M., Teodorescu,R., Blaabjerg,B., “Control of Single-Stage Single-Phase PV inverter” – Pro ceedings of EPE 2005, 11-13 sep 2005, Dresden

Agenda

- Control structures for single-phase PV systems
- Grid synchronization and monitoring
- Current control design
- MPPT strategies
- Anti-islanding strategies

Objectives

- ¾Grid monitoring requirements for PV inverters
- ¾PLL Basics
- ¾Design of PLL
- ¾Practical PLL for single-phase systems
- ¾Methods to create the orthogonal component
- ¾Comparison of different methods
- ¾Conclusions
- ¾Reference papers

Grid monitoring requirements for PV inverters

- In Europe the "draft" standard IEC61727 [1] is coming soon!
- In US there is already IEEE 929 [2] that have similar requirements!

The following conditions should be met, with voltages in RMS and measured at the point of utility connection.

- When the utility frequency is out side the range of +/- 1 Hz the inverter should cease to energize the utility line within 0.2 seconds.
- The PV system shall have an aver age lagging power factor greater than 0,9 when the output is greater than 50% rated.

- Thus the grid voltage and frequency should be estimated and monitored fast and accurate enough in order to cope with the standard

Grid synchronization requirements

- A good synchronization of the current with the grid voltage is necessary as :
  - the standards require a high power factor (> 0.9)
  - a ”clean” reference for the current is necesarry in order to cope with the harmonic requirements of IEC61727/IEEE929
  - grid connection transients needs to be minimized in order not to trip the PV inverter
- There are two basical synchronization methods: :
  - Filtered Zero Cross Detection (ZCD)
  - PLL
- The classical solution for single-p hase systems was Filtered ZCD as for the PLL two orthogonal voltages are required.
- PLL is used usually in three-phase systems!
- The trend now is to use the PL L technique also by creating ”virtual” orthogonal components using different techniques!

Filtered Zero Cross Detection (ZCD) based monitoring and synchronization

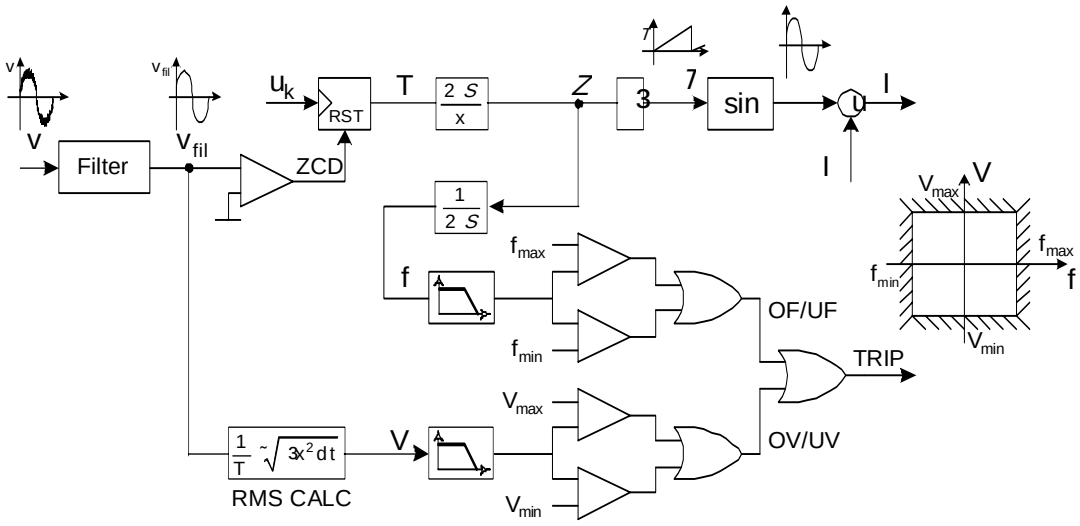

- Filtering introduces delay. Ther are digital predictive FIR filters without delay bu with high complexity (very high order!)
- The RMS voltage and frequency are calculated once in a period Æpoor detection of changes (sags, dips, etc.)

PLL-based monitoring and synchronization

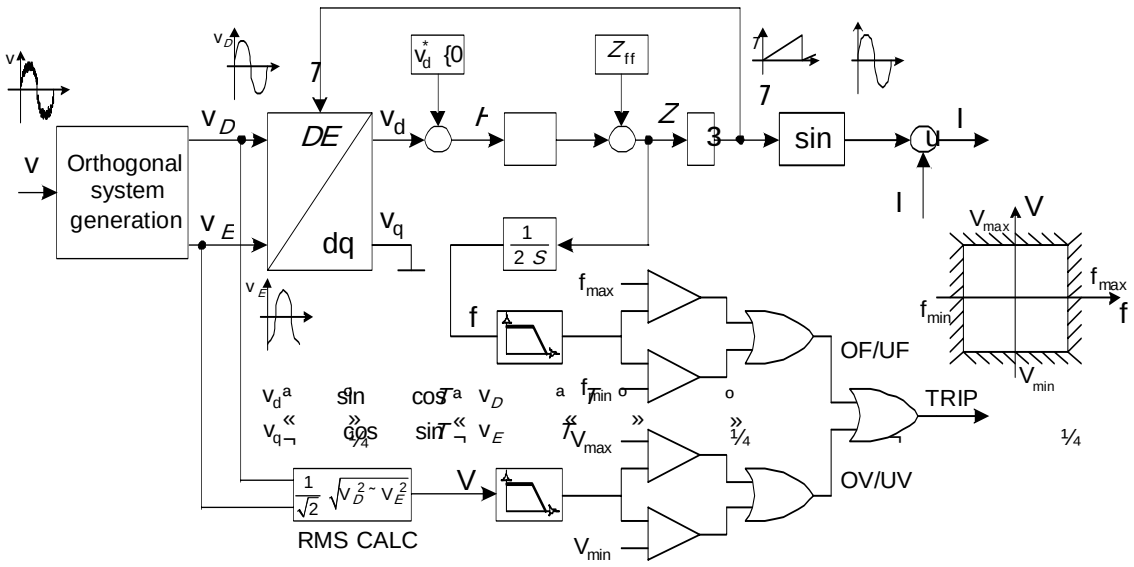

- PLL introduces no delay!
- The RMS voltage and frequency are calculated instantenously Æbetter detection of changes (sags, dips, etc.)
- PLL is the most typical solution used in industry!

PLL Basics

- A PLL produces a signal to the output that synchronizes in phase and frequency with the input signal.
- It controls the phase of its internal signal such that the error- the difference between its phase and the one from the input signal- is kept to a minimum while the frequency is kept the same as the input signal

A PLL has three components:

- Phase Detector (PD) or the multiplier
- The Loop filter (LF)
- Voltage ControlledOscillator (VCO)

- PLLs are almost always low order, typically second order, i.e. using 1-st order LF or more typically a PI controller
- The design of the PLL is easier with 2-nd order PLL as for 2-nd order systems the bandwith and damping factor can be easiliy set using linear system theory

Design of PLL [3]

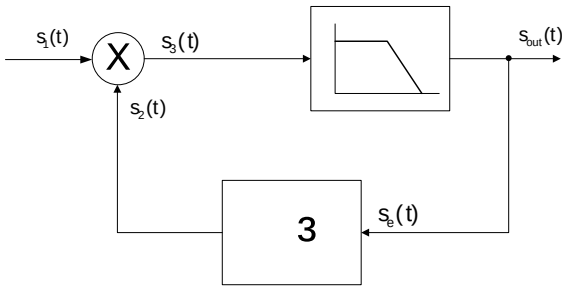

In order to analyse the PLL behaviour we linearize the loop using Laplace transform to get the transfer function.

The transfer function VCO $\omega_{out} = \omega_c + K_0 s_e(t)$ $\quad \theta_i(t) = \int_0^t \omega_{out}\,dt$ $\quad \theta_c(t) = K_0 \int_0^t s_e(t)\,dt$

The VCO output signal in time domain and in Laplace will be:

$$V_{out} = A_0 \cos\left(\omega_c t + K_0 \int_0^t s_e(t)\,dt + \theta_0\right) \qquad \theta_{out}(t) = K_0 \int_0^t s_e(t)\,dt \qquad \theta_{out}(s) = \frac{K_0}{s}\, s_e(s)$$

The VCO transfer function will be:

$$\frac{\theta_{out}(s)}{s_e(s)} = \frac{K_0}{s}$$

Grid synchronization and monitoring

Design of PLL

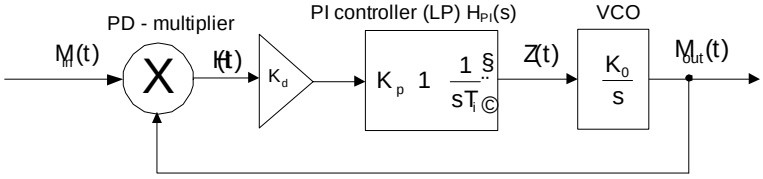

Assuming Ko=Kd=1 (typically),the transfer function of PLL in open loop will be:

$$\frac{\theta_{out}(s)}{\theta_{in}(s)} = \frac{H_{PI}(s)}{s}$$

The transfer function of the closed loop for the output phase as function of input phase will be:

$$H_M(s) = \frac{\theta_{out}(s)}{\theta_{in}(s)} = \frac{H_{PI}(s)}{s + H_{PI}(s)} = \frac{K_p s + \frac{K_p}{T_i}}{s^2 + K_p s + \frac{K_p}{T_i}}$$

The transfer function of the closed loop for the phase error as function of the input phase will be:

$$H_H(s) = \frac{\theta_e(s)}{\theta_{in}(s)} = \frac{s}{s + H_{PI}(s)} = \frac{s^2}{s^2 + K_p s + \frac{K_p}{T_i}}$$

Considering the general form of second order systems we can get the following equivalent expressions:

$$H_M(s) = \frac{2\zeta\omega_n s + \omega_n^2}{s^2 + 2\zeta\omega_n s + \omega_n^2} \qquad H_H(s) = \frac{s^2}{s^2 + 2\zeta\omega_n s + \omega_n^2} \qquad \omega_n = \sqrt{\frac{K_p}{T_i}}; \qquad \zeta = \frac{\sqrt{K_p T_i}}{2}$$

Grid synchronization and monitoring

Design of PLL

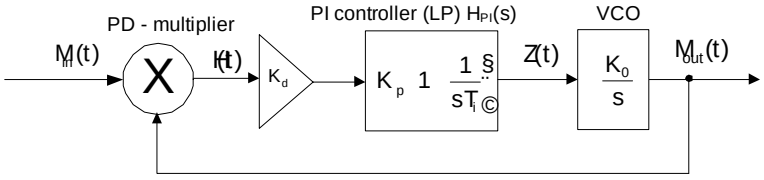

We can use the standard specifications for second order systems without zeros as a rough approximation that should give a 5% overshoot (Mp) at step response [8]

$$[\quad 0.707; \quad t_s \quad \frac{4.6}{[_n} \; ; \quad t_r \quad \frac{1.8}{Z_n} \qquad Z$$

So the PI controller can be tunned for a specified settling time t_s and damping factor î as followings:

$$K_p \quad \frac{9.2}{t_s}; \quad T_i \quad \frac{t_s [^2}{2.3}$$

Grid synchronization and monitoring

PLL for single-phase systems [4]

- PLL is used in single-phase systems for obtaining an angle synchronous with the grid used for creating the current reference and also for the estimation of grid frequency and voltage for monitoring purposes
- In single-phase systems there is only one signal (voltage) so the orthogonal component must be created artificially. Also a center frequency equal with the grid frequency must be feedforwarded at the input of the VCO integrator

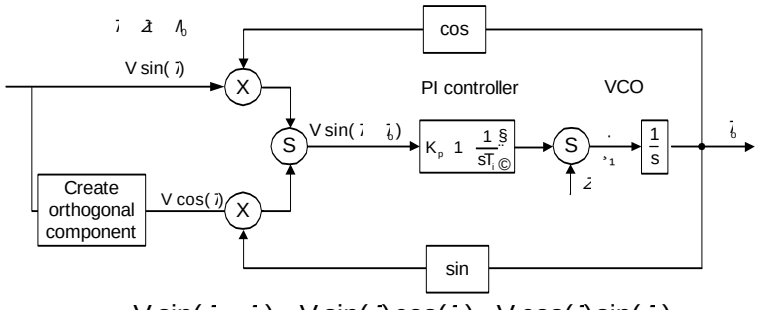

$$V \sin(\quad) \quad V \sin( ) \cos( ) \quad V \cos( ) \sin( )$$

- In order to create the the input signal as phase error, multiplication with sin and cosof the pll output is used.
- Due to the fact that the phase error signal has an amplitude of V, the PI controller gain should be reduced accordingly:

$$K_p \quad \frac{9.2}{t_s} \frac{1}{V}; \quad T_i \quad \frac{t_s /^2}{2.3}$$

Grid synchronization and monitoring

A Practical PLL for single-phase systems - dq PLL

- Another equivalent approach typically used for PLL implementation is the use of áâ-dq transformations

$$\begin{bmatrix} V_D \\ V_E \end{bmatrix} = \begin{bmatrix} \sin(\theta) & -\cos(\theta) \\ \cos(\theta) & \sin(\theta) \end{bmatrix} \cdot \begin{bmatrix} V_d \\ V_q \end{bmatrix} \quad \begin{bmatrix} V_d \\ V_q \end{bmatrix} = \begin{bmatrix} V_D \cdot \cos(\theta) & \sin(\theta) \\ -V_E \cdot \sin(\theta) & \cos(\theta) \end{bmatrix}$$

where Vd should be zero at synchronism and therfore it is used as input signal while Vq represents the amplitude of the voltage and is used for monitoring. A more precise estimation of the amplitude can be obtained by calculated the module of the orthogonal system, as shown bellow:

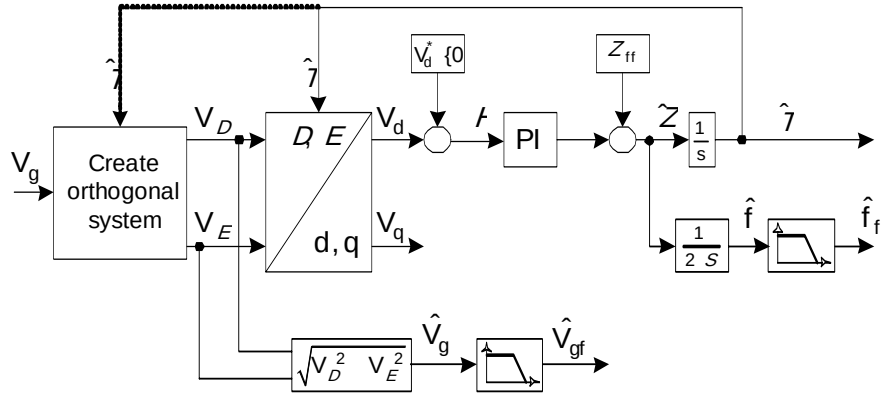

LP filters are used to smooth the frequency and amplitude estimation!

Grid synchronization and monitoring

Methods to create the orthogonal component

- Transport Delay T/4 [5]

- The idea is that for sinusoidals systems a delay of T/4 will produce an orthogonal signal.

- This method works fine for fixed grid frequency. If the grid frequency is changing with for ex +/-1 Hz, then the PLL will produce an error

- In order to overcome this, the cosinus funtion of the PLL angle is calculated by delaying the sin(θ) with T/4!

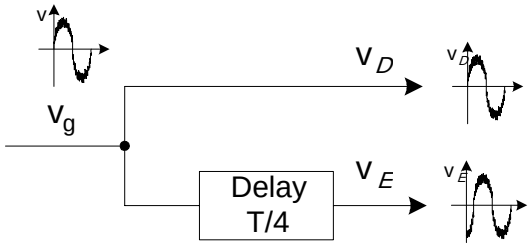

Grid synchronization and monitoring

Methods to create the orthogonal component

- Another method is Inverse Park Transformation [4]

A singlephase voltage (V) and an internally generated signal (V .) are used as inputs to a Park transformation block (. -dq). The d axis output of the Park transformation is used in a control loop to obtain phase and frequency information of the input signal.

V . is obtained through the use of an inverse Park transformation, where the inputs are the d and q-axis outputs of the Park transformation (dq- .). fed through first-order pole blocks.

Although the algorithm of the PLL based on the inverse Park transformation is easily implemented, requiring only an inverse Park and two first-order low-pass filters, the tuning of its PI controller and the choice of the time constant of the filters is a more difficult process, as compared with the other PLL algorithms. This is due to the presence of the two interdependent nonlinear loops, which makes linearization and use of linear system analysis tools more troublesome processes.

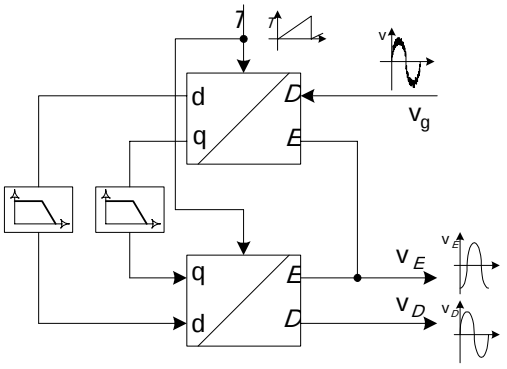

Grid synchronization and monitoring

Experimental results - frequency step with ideal grid. Non filtered and 100ms filtered estimates of freq. and amp.

Grid synchronization and monitoring

Experimental results - frequency step with real grid. Non filtered and 100ms filtered estimates of freq. and amp.

Experimental results - phase jump with ideal grid. Non filtered and 100ms filtered estimates of freq. and amp.

Experimental results - amp step with ideal and real grid.
Non filtered and 100ms filt ered estimates amplitude

Conclusions

- PLL is a very useful method that enable the PV inverters to:
  - Create a "clean" current reference synchronized with the grid
  - Comply with the grid monitoring standards
- The PLL is able to track the frequency and phase of the input signal in a designed settling time
- By setting a higher settling time a "filtering" effect can be achieved in order to obtain a "clean" reference even with a polluted grid.
- The PLL needs two signals in quadrature at the input.
- For single-phase systems as there is only one signal available, the orthogonal signal needs to be created artificially.
- Two methods have been investigated: Transport Delay (T/4) and Inverse Park Transformation.
- Having the orthogonal components, the amplitude can be calculated
- Both methods requires LP filters on the estimated frequency and amplitude to get smooth signals and both pass IEC61727
- Inverse Park Transformation provides better performance under frequency changes but involves more calculations!

References

[1] IEC 61727 CDV Ed.2 – Chara cteristics of the Utility Interface for Photovoltaic (PV) Systems, 2002

[2] IEEE Std 929-2000 – IEEE Recommended Practice for Utility Interface of Photovoltaic (PV) Systems,2000, ISBN 0-7381-1934-2

[3] Se-Kyo Chung - "A phase tracking syst em for three phase utility interface inverters" Power Electronics, IEEE Transa ctions on Volume 15, Issue 3, May 2000 Page(s):431 - 438

[4] Silva, S.M.; Lopes, B.M.; Filho, B. J.C.; Campana, R.P.; Bosventura, W.C. "Performance evaluation of PLL algorit hms for single-phase grid-connected systems" Industry Applications Confer ence, 2004. 39th IAS Annual Meeting. Conference Record of the 2004 IEEE Volu me 4, 3-7 Oct. 2004 Page(s):2259 - 2263 vol.4

[5] Ciubotaru, M, Teodorescu, R., Blaab jerg, F., "Improved PLL Structures for Single-Phase Grid Inverters" – Proceedings of International Conference on Poer Electronics and Intelligent Control fo r Energy Conservation, PELINCEC'05, Warsaw, 16-19 October 2005

Agenda

- Control structures for single-phase PV systems
- Grid synchronization and monitoring
- Current control design
- MPPT strategies
- Anti-islanding strategies

Objectives

- Introduction
- Grid harmonics requirements for PV inverters
- LCL filter design
- Shortcomings of PI controller
- Generalized integrator
- PI and Proportional Resonant (PR) current control of single-phase PV inverters
- PR current control loop of single-phase PV inverter
- Discrete implementation of PR controller
- Experimental results
- Conclusions
- Reference papers

Introduction to current co ntrol for single-phase grid inverter with LCL filter

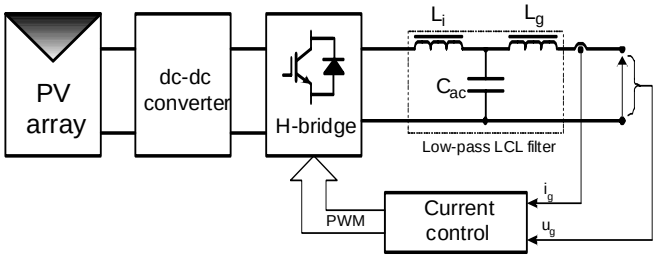

- The LCL filter is now commonly used to connect VSI-PWM inverters to the utility grid as it requires significantly less inductance as the L filter in order to achieve the same attenuation
- Special attention should pe payed when designing the LCL filter + current controller in order to avoid resonance in LCL filter and ensure stability.
- The PI controller commonly used to control the current in single-phase PV inverters exhibits stationary error and poor harmonic rejection.
- A new breed of controllers called Proportional Resonant (PR)can alleviate these shortcomings and can be successfully used in grid connected VSI-PWM inverters

Grid current harmonics and THD requirements for PV inverters

- In Europe the "draft" standard IEC61727 [1] is coming soon!
- In US there is already IEEE 929 [2] that have similar requirements!
- The following conditions should be met regarding grid current harmonic content.

- The total THD of the grid current should not be higher than 5%

- Thus high performance current control is required including harmonic compensation in order to cope with the standard

Shortcomings of PI controller

- Typically PI controllers are used for the current loop in single-phase grid inverters.
- The PI current control of a single-phase inverter has well known drawbacks:

$$G_{PI}(s) \quad K_P \quad \frac{K_I}{s}$$

- When the current controlled inverter is connected to the grid, the phase error results in a power factor decrement and the limited disturbance rejection capability leads to the need of grid feed-forward compensation .
- However the imperfect compensation action of the feed-forward control due to the background distortion results in high harmonic distortion of the current and consequently non-compliance with international power quality standards.

The generalized integrator GI [4]

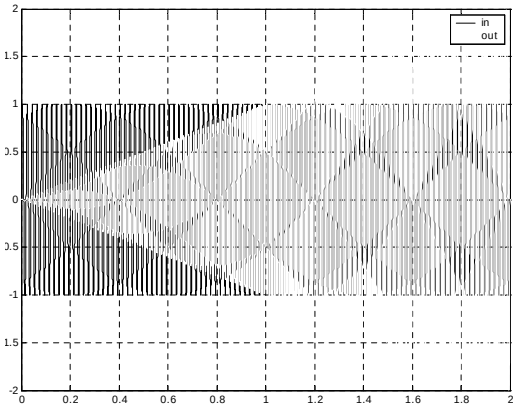

$$G_{GI}(s) \quad K_I \frac{s}{s^2 \quad Z_o^2}$$

- The Generalized Integrator (GI) is a double integrator that achieves infinite gain at a certain frequency, called resonance frequency, and almost no attenuation outside this frequency.
- Thus, it can be used as a notch filter in order to compensate the harmonics in a very selective way
- The GI will lead to zero stationary error and improved and selective disturbance rejection as compared with PI controller

PI vs PR for single-phase gr id inverter current control

The H-bridge PV inverter connected to the grid through an LCL filter

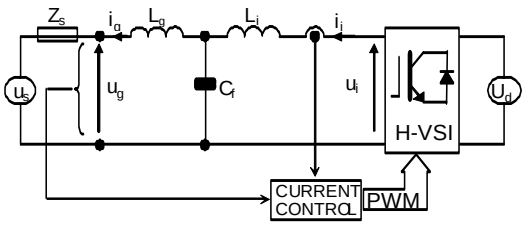

The current loop of PV inverter with PI controller

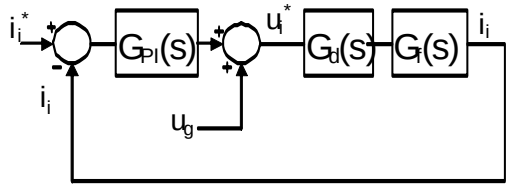

The current loop of PV inverter with PR controller and HC

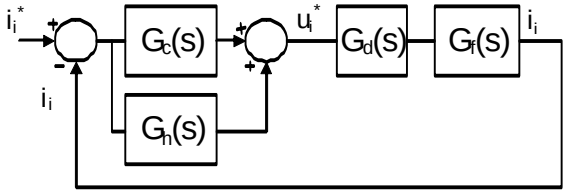

PI $\quad G_{PI}(s) \quad K_P \quad \frac{K_I}{s}$

PR $\quad G_c(s) \quad K_P \quad K_I \frac{s}{s^2 \quad Z_o^2}$

HC $\quad G_h(s) \quad \sum_{h\ 3,5,7} K_{Ih} \frac{s}{s^2 \quad Z_o h^2}$

Inverter $\quad G_d(s) \quad \frac{1}{sT_s \quad 1}$

Plant $\quad G_f(s) \quad \frac{i_i(s)}{u_i(s)} \quad \frac{1}{L_{fi}} \frac{s^2 \quad Z_{LC}^2}{s^2 \quad Z_{res}^2} \qquad Z_{LC}^2 \quad \frac{1}{L_g C_f} \qquad Z_{res}^2 \quad \frac{L_g \quad L_i \quad Z_{LC}^2}{L_i}$

- No grid voltage feed-forward is required when using
- GIs tuned to the low harmonics can be used for selective harmonic compensation by cascading the fundamental component GI

Current control design

PR current control for sin gle-phase grid inverter
Frequency analysis

Open-loop PR current control system with and without harmonic compensator

Closed loop PR current control system with and without harmonic compensator

- Having added the harmonic compensator, the open-loop and closed-loop bode graphs changes as it can be observed with dashed line. The change consists in the appearance of gain peaks at the harmonic frequencies, but what is interesting to notice is that the dynamics of the controller, in terms of bandwidth and stability margin remains unaltered .

PR current control for sin gle-phase grid inverter
Frequency analysis

Pole-zeros placement of closed-loop current control system

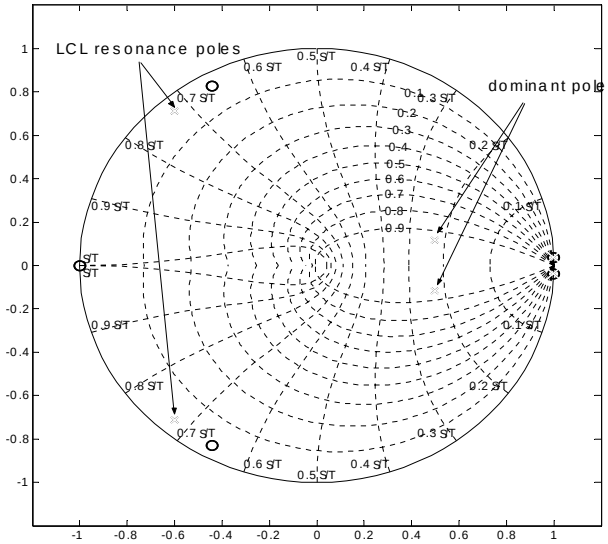

Current control design

- The dominant poles of the controller should have a high damping (0.707) in order to ensure a smooth response during transients
- Also the high-frequency poles from the LCL-filter should be inside the unity-circle indicating stability. Sometime damping resistors in series with the capacitors can be required to ensure stability. The most desirable design will be without damping resistors as they produce losses. A good control design can achieve this!

- The one-sample delay of the system also increases the stability by pushing the LCL-filter poles toward the unity-circle centrum. The zero introduced is attracting the high-frequency poles!

Grid Converters and their Control in DPGS, Tutorial IECON'05, IV-Control of Single-Phase PV Systems

PR current control for sin gle-phase grid inverter
Frequency analysis

Disturbance rejection (current error ratio disturbance) of the PR+HC, PR and P

$$\left.\frac{I(s)}{u_g(s)}\right|_{i_i^*=0} \quad \frac{G_f(s)}{1 \quad G_c(s) \quad G_c(s) \quad G_d(s) \quad G_i(s)}$$

$$G_c(s) \quad K_P \quad K_I \frac{s}{s^2 \quad \omega_0^2}$$

$$G_h(s) \quad \sum_{h\ 3,5,7} K_{Ih} \frac{s}{s^2 \quad \omega_0 h^2}$$

$$G_f(s) \quad \frac{i_i(s)}{u_i(s)} \quad \frac{1}{L_{fi}} \frac{s^2 \quad \omega_{LC}^2}{s^2 \quad \omega_{res}^2}$$

$$\omega_{res}^2 \quad \frac{L_g \quad L_i}{L_i} \tilde{\omega}_{LC}^2 \qquad \omega_{LC}^2 \quad \frac{1}{L_g C_f}$$

Current control design

- Around the 5th and 7th harmonics the PR attenuation being around 125 dB and the PI attenuation only 8 dB. The PI rejection capability at 5th and 7th harmonic is comparable with that one of a simple proportional controller, the integral action being irrelevant.
- PR +HC exhibits high performance harmonic rejections leading to very low current THD!

PR current control for sin gle-phase grid inverter
Tuning

• The gain Kp is founded by ensuring the desired bandwith using either rlocus Matlab function or SISOTOOL.
•The integral constant Ki acts to eliminate the steady-state phase error.

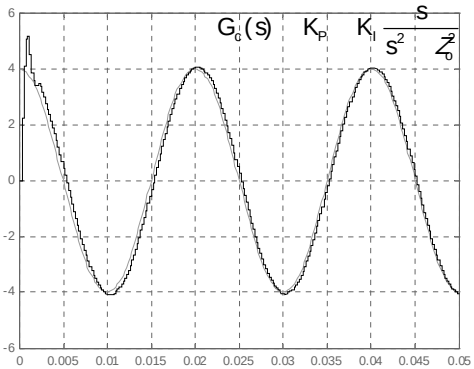

Ki = 100

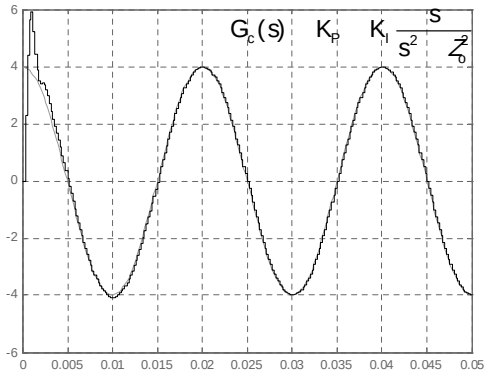

Ki = 500

Current control design

- A higher Ki will "catch" the reference faster but with higher overshoot.
- Another aspect is that Ki determines the bandwidth centred at the resonance frequency, in this case the grid frequency, where the attenuation is positive. Usually, the grid frequency is stiff and is only allowed to vary in a narrow range,typically ± 1%.

Discretization of generalized integrators Frequency analysis

GI integrator decomposed in two simple integrators

$$\frac{y(s)}{u(s)} = \frac{s}{s^2 + \omega^2}$$

$$\begin{cases} y(s) = \frac{1}{s}\left[u(s) - v(s)\right] \\ v(s) = \frac{1}{s}\omega^2 y(s) \end{cases}$$

Forward integrator for direct path and backward for feedback path

$$\begin{cases} y_k = y_{k-1} + T_s\left(u_{k-1} - v_{k-1}\right) \\ v_k = v_{k-1} + T_s\omega^2 y_k \end{cases}$$

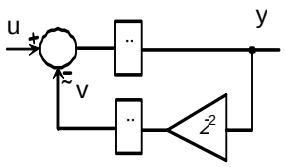

The inverter voltage reference

$$u_i^*(s) = H(s)\left[K_p + \frac{K_I \omega s}{s^2 + \omega^2}\right]$$

Difference equations

$$\begin{cases} y_k = y_{k-1} + T_s K_I H_{k-1} + T_s v_{k-1} \\ u_{i,k}^* = K_p H_k y_k + y_k \\ v_k = v_{k-1} + T_s \omega^2 y_k \\ H_{k-1} = H_k \\ y_{k-1} = y_k \\ v_{k-1} = v_k \end{cases}$$

Control diagram of PR implementation

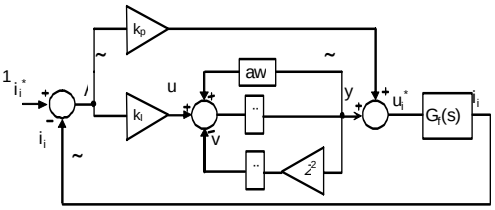

$$aw = \begin{cases} -y_{max} & y < -y_{max} \\ y & -y_{max} \le y \le y_{max} \\ y_{max} & y > y_{max} \end{cases}$$

Another discretization using delta operator is presented in the Laboratory Handbook PV Systems Lab 3 - Appendix and will be demonstrated in the lab

Current control design

Experimental results

- 1.5 kW IGBT full-bridge inverter
- dSPACE 1103 controller
- LCL filter (1.4mH, 2uF, 0.7mH)
- Ud = 450 V
- Ug = 230 V rms
- Kp=10, Ki=1000,
- fs = 10kHz

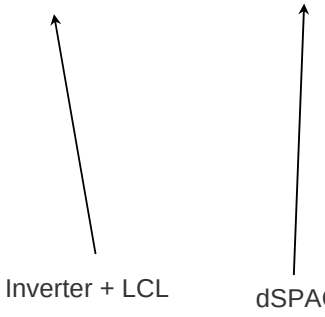

Current control design

Experimental results - current harmonics in stationary

PI + Voltage-Feed-Forward (Kp=10, Ti=4Ts)
THD = 12%,

PR+HC (Kp=10, Ki=1000, Ki3,5,7=1000)
THD = 1.0%.

Experimental results - current response at reference step

PI + Voltage-Feed-Forward (Kp=10, Ti=4Ts),
Overshoot = 100%

PR+HC (Kp=10, Ki=1000, Ki3,5,7=1000)
Overshoot = 0!

Conclusions

- A new current control strategy called Proportional Resonant (PR) suitable for PWM grid-connected VSI has been successfully developed and tested.
- Unlike PI, the PR uses Generalized Integrators (GI) that are double integrators achieving very high gain in a narrow frequency band centred on the resonant frequency and almost null outside.
- This makes the PR controller to act as a notch filter at the resonance frequency and thus it can track a sinusoidal reference without having to increase the switching frequency or adopting a high gain, as it is the case for the classical PI controller.
- Several GI can be been added in order to achieve selective Harmonic Compensation (HC) without influencing the dynamics of the controller.
- A modest computation burden of around 40 ms was achieved for PR+HC on a 16-bit fixed-point TMS320F24xx DSP platform due mainly to a novel discretization method.
- Considerable lower current THD in comparison with the classical stationary PI controller and compliance with IEC 61727/IEEE 929 standards is achieved.

References

[1] IEC 61727 CDV Ed.2 – Characteris tics of the Utility Interface for Photovoltaic (PV) Systems, 2002

[2] IEEE Std 929-2000 – IEEE Recommend ed Practice for Utility Interface of Photovoltaic (PV) Sy stems,2000, ISBN 0-7381-1934-2

[3] Teodorescu,R., Blaabjerg,F., Li serre.M., Borup,U.,-" A New Control Structure for Grid-Connected PV Inverters with Zero Steady-State Error and Selective Harmonic Compensation" – Proceedings of APEC'04, Anaheim, CA

[4] Teodorescu,R., Blaabjerg,F., Li serre.M.- "Proportional-Resonant Controllers. A New Breed of Controllers Suitable for Grid-Connected Voltage-Source Converters" Proceed ings of OPTIM'04, 20-21 may 2004, Brasov, vol. III pp 9-14

Agenda

- Control structures for single-phase PV systems
- Grid synchronization and monitoring
- Current control design
- MPPT strategies
- Anti-islanding strategies

Objectives

- Introduction to MPPT
- Incremental conductance strategy
- Perturb & Observe strategy
- Constant Voltage
- Conclusions
- Reference papers

Introduction to Maximum Power Point Tracking - MPPT

MPPT strategies

The MPP is affected by temperature and irradiance.

The task of MPPT is to track this MPP regardless of weather or load conditions so that the PV system draws maximum power from the solar array.

The MPPT is a nonlinear and time-varying system that has to be solved.

All algorithms are based on the fact that, looking at the power characteristic, at the left of the MPP the dP/dV > 0, at the right dP/dV < 0 and at MPP dP/dV = 0

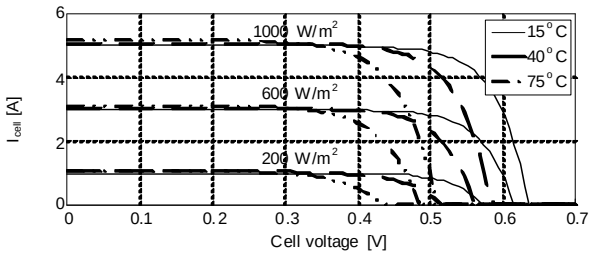

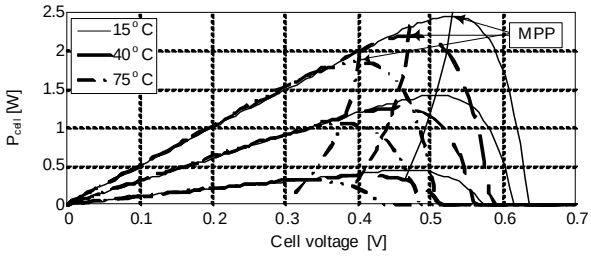

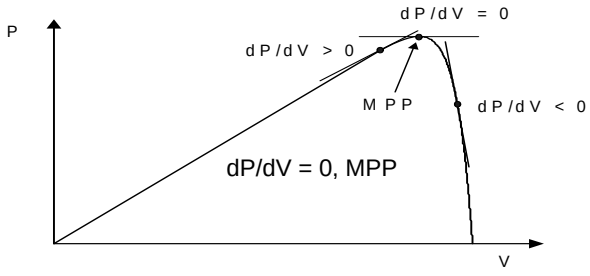

MPPT strategies – Perturb and Observe (P&O)

MPPT strategies

Advantages: easy to implement

Disadvantages: oscillation around MPP

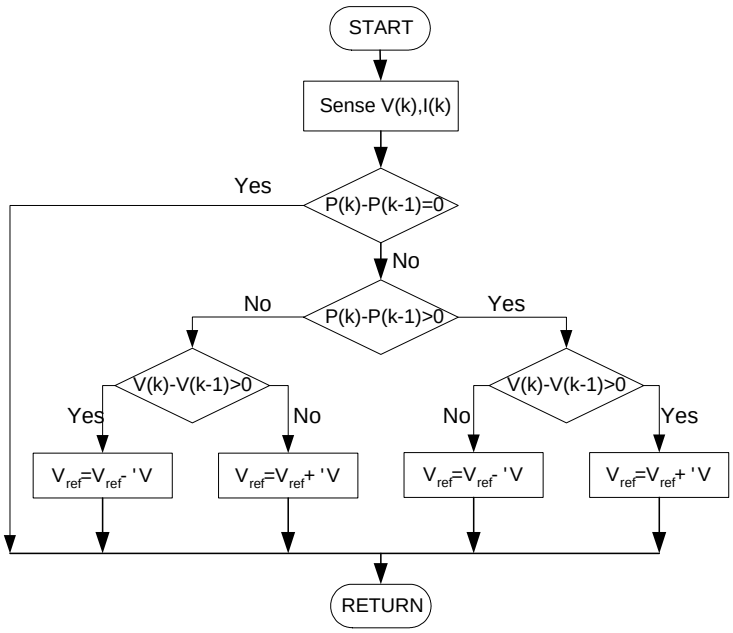

dP ! 0 ½ dP Ÿ 0 increase VŸ
dV ! 0 ¿ dV

dP ! 0 ½ dP Ÿ 0 decrease VŸ
dV 0 ¿ dV

dP 0 ½ dP Ÿ 0 decrease VŸ
dV ! 0 ¿ dV

dP 0 ½ dP Ÿ 0 increase VŸ
dV 0 ¿ dV

MPPT strategies – Incremental Conductance (INC)

Advantages: no more perturbations when MPP is reached

Disadvantages: increased complexity over P&O

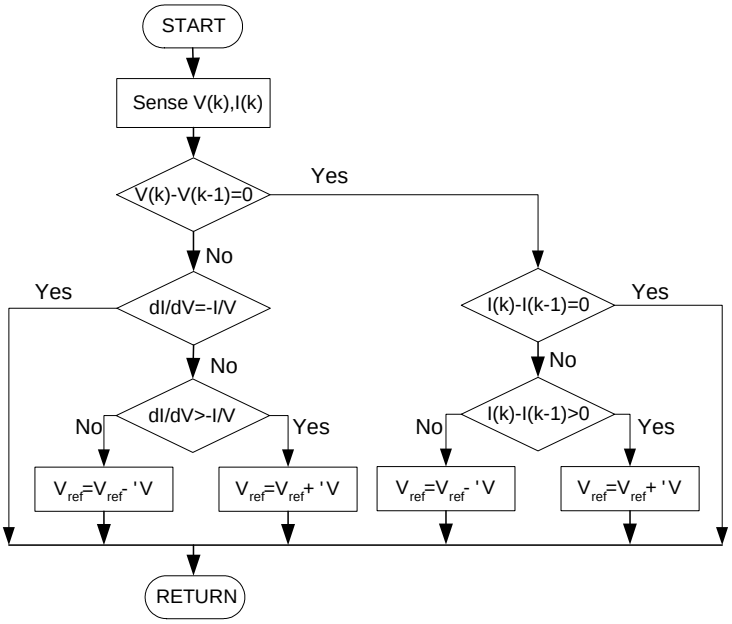

dP/dV > 0, if G > -dG

dP/dV = 0, if G = -dG

dP/dV < 0, if G < -dG

$$P \quad VI \quad \frac{dP}{dV} \ddot{Y}I \quad V\frac{dI}{dV}$$

$$MPP: \frac{dP}{dV} \quad 0 \quad \frac{I}{V} \quad \frac{dI}{dV} \quad G \quad dG$$

MPPT strategies

MPPT strategies - Constant Voltage (CV)

Constant Voltage

This algorithm makes use of the fact that the MPP voltage changes only slightly with varying irradiance, The ratio of VMP/VOC depends on the solar cell parameters, but a commonly used value is 76%. In this algorithm the MPPT momentarily sets the PV array current to zero to allow a measurement of the array's open circuit voltage. The array's operating voltage is then set to 76% of this measured value. This operating point is maintained for a set amount of time and then the cycle is repeated. A problem with this algorithm is the available energy is wasted when the load is disconnected from the PV array, also the MPP is not always located at 76% of the array's open circuit voltage.

MPPT strategies

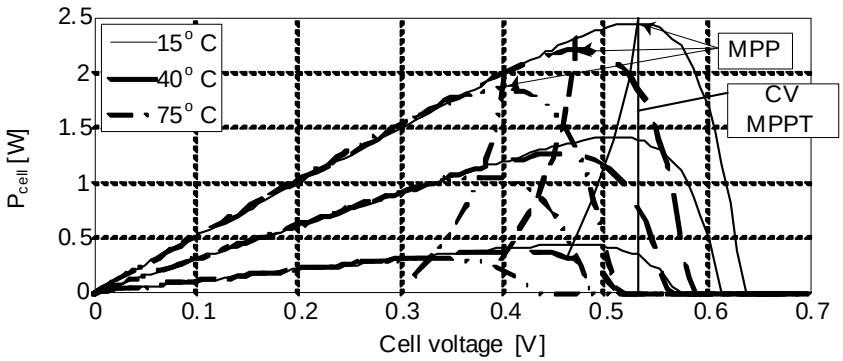

Conclusions

- Preliminary results indicate that perturb and observe compares favorably with incremental conductance and constant voltage.

- Although incremental conductance is able to provide marginally better performance, the increased complexity of the algorithm will require more expensive hardware, and therefore may have an advantage over perturb and observe only in large PV arrays

References

[1] D.P.Hohm, M.E.Ropp – "Comparative Study of MPPT Algoithms Using Experimental, Programmable MPPT Te st Bed", Proc. of Photovoltaic Specialists Conference, 2000, pp.1699 - 1702

Agenda

- Control structures for single-phase PV systems
- Grid synchronization and monitoring
- Current control design
- MPPT strategies
- Anti-islanding strategies

Objectives

- ¾What in the earth is anti-islanding?
- ¾Anti-islanding requirements
- ¾Anti-islanding methods (passive/active)
- ¾Positive feedbcak method
- ¾Harmonic injection
- ¾Conclusions
- ¾Reference papers

Understanding anti-islanding

- Islanding for a distribute po wer generation system (DPGS) is defined when the DPGS does not cease to operate when the grid is disconnected, i.e. is continuing to operate with local load
- We can have desired islandings, for example in power systems when a section containing DPGS and load is running without conenction to the grid and undesired islanding when it can pose danger for grid maintainance people!
- In PV, WT and other Distribute power generation systems (DPGS) there are anti-islanding features required by standards!

Rationale for anti-islanding requirements

- The utility cannot control voltage and frequency in the island, creating the possibil ity of damage to customer equipment in a situation over which the utility has no control.
- Utilities, along with the PV distributed resource owner, can be found liable for electrical damage to customer equipment connected to their lines that results from voltage or frequency excursions outside of the acceptable ranges
- Islanding may create a hazard for utility lineworkers by causing a line to remain energized that may be assumed to be disconnected from all energy sources.
- Reclosing into an island may result in retripping the line or damaging the distributed resource equipment, or other connected equipment, because of out-of-phase closure.
- Islanding may interfere with the manual or automatic restoration of normal service by the utility.

IEEE929 [1]/IEC61727[2]

anti-islanding requirements

The inverter shoud cease to energize the utility in 10 cycles (200ms for 50Hz) having an RLC local load with Q=2.5 (Q=2.5P!)

The test should be repeated for 25, 50, 75 and 100% P with a perfect balanced power (igrid=0)

In US IEEE929 was incorporated in the new standard IEEE 1574 [3] - which applys to all distributed power generation systems up to 30 kW (PV, FC, etc).

In EU, the IEC61727 is still a "draft" but most of the countries require similar demands.

EN 50330 (ENS) requirements for PV [4]

Having a perfect balanced local loading (Igrid=0) the PV must isolate from the grid within 5 seconds at a change of impedance of 0.5 ohms resistive.

The test should be repeated for different grid impedance angles

The automatic disconnecting facility consists in two independent mains monitoring devices (redundance)

Anti-islanding strategies

Anti-islanding methods [5]

Passive methods

- Under/Over Voltage (UV/OV) and Under/Over Frequency (UF/OF)
- Voltage phase jump detection
- Detection of voltage harmonics

Active methods - resident in the inverter

- Output power variation
- Active Frequency Drift (AFD)
- Slip-Mode frequency-Shift (SMS)
- Positive feedback of frequency or voltage
- Impedance measurement using external device or harmonic injection

Anti-islanding strategies

Under/Over Voltage and Under/Over Frequency

- Description: Inverter operation is only allowed within a selected amplitude/frequency window. If the amplitude or frequency of the PCC voltage leaves the window, the PV system is disconnected from the utility.

- Strengths : low cost, equivalent to ut ility protection, is used in conjunction with other anti-islanding methods

- Weaknesses : Large NDZ, slow reaction times

- NDZ : dependent on impedances, po wer ratings, operating point

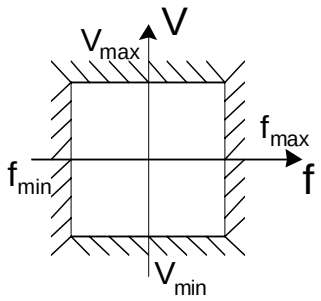

Voltage phase jump detection

- Description: monitor the phase difference between the inverter and the utility for a sudden jump

– Strengths : easy to implement, does not affect the output power quality or system transient response

– Weaknesses : difficult to choose thresholds that detect islanding without false trips

– NDZ : unity power factor loads produce no phase error!

Detection of voltage harmonics

- Description: detect the increase of THD in the PCC voltage that can occur in islanding mode due to switching harmonics

– Strengths : should not be dependent on power factor, good for multi-inverter applications

– Weaknesses : not always possible to select a threshold that guarantees non-islanding without ca using excessive false trips. Also som inductive load could attenuat e the switching harmonics below the threshold.

– NDZ : difficult to evaluate!

Active frequency drift [6]

- Description : output waveform is slightly distorted so islanding causes a drift in frequency

– Strengths : very easy to implement with microprocessor based inverters

– Weaknesses : small degradation in output power quality

– NDZ : relatively large relative to ot her active methods, depends on the value of the chopping fraction used, small (<1% then same as SMS), larger causes NDZ to shift toward capacitive.

Ipv goes to zero before or after the PCC voltage.

Slip-mode Phase Shift (SMS) [6]

- Description : the current-voltage phas e is changed as funtion of frequency so islanding causes a drift in frequency

– Strengths : very easy to implement with microprocessor based inverters, works with multi-inverter applications

– Weaknesses : some RLC loads (high- Q loads with resonant frequencies very near the line frequency) have phase response curves such that the phase of the load increases faster than the phase of the PV inverter

– NDZ : relatively small.

Positive feedback methods

RLC load characteristics

Two mechanisms

Voltage feedback – when inverter output voltage is increasing, the AI feedback will command the inverter output power to increase. In order to balance the power, the voltage will keep increase… As a result the voltage will be eventually out of nominal ranges so the islanding can be detected! Similar but opposite destabilization occurs when the sensed voltage is decreasing

Frequency feedback – when the inverter-sensed frequency is increasing, the AI feedback will command the inverter reactive-power output to increase. Due to load characteristic, the frequency will keep increasing in order to balance the reactive power. The increased frequency will further drive the inverter reactive power up, and as result, the frequency will increase more…Eventually the frequency will be driven out of range and the inverter will trip.. Similar results occurs when the frequency is initially decreasing.

Frequency positive feedback implementation

Concept

DQ implementation

Frequency positive feedback

DQ pll using Inverse Park Transformation can be used in single-phase systems to create the dq components!
BPF 1-10Hz needed to remove noise and dc -offset! Gain should be high enough to make the system unstable in island ing but stable in non-islanding mode
For Voltage positive feedback, Vd (amplitude og Vgrid) is feedforwarded to id_ref

Impedance measurement - external device

Classical solution - using external device that produces an transient

For ex. A capacitor is switched in and the grid voltage zero-crossing shift is measured. Thus the gr id impedance is estimated

The disadvantage is that it requires extra hardware!

Impedance measurement - harmonic injection

New solution - using extra SOFTWARE! [7]

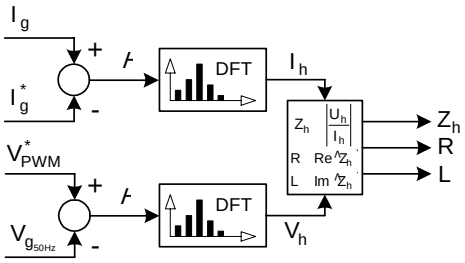

A non-characteristic harmonic current is injected in the grid by through the PWM. The resulting harmonic voltage w ill depend on the grid impedance. The voltage and current at this frequency are computed using DFT. The impedance is calulated by dividing the voltage to th e current. The real part is Rg and the imaginary part is Lg

Impedance measurement - harmonic injection

DFT Implementation

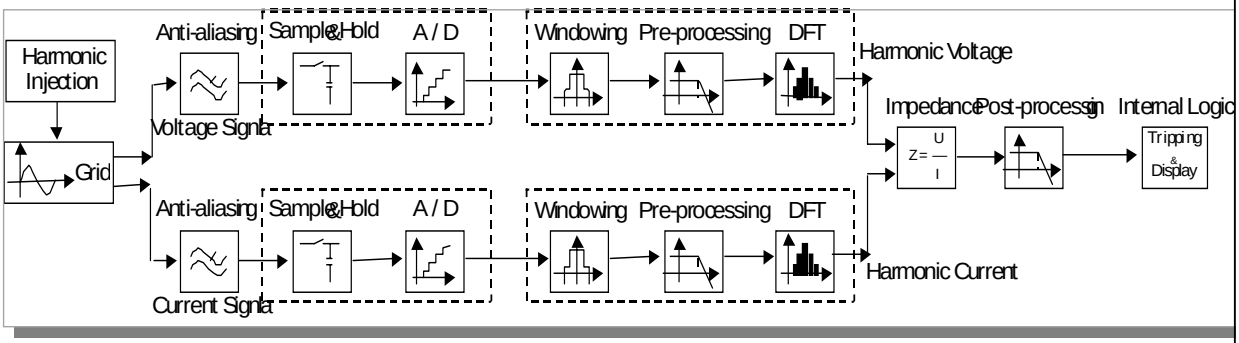

Principle of harmonic detection and calculation of the grid impedance.

Simulation results

Impedance measurement - harmonic injection 75Hz



Comparison of spectra with and without harmonic injection
a) Grid voltage. b) Grid current. The PV power is 3 kW.

A current transient in the current is introduced together wth the injection resulting in impedance estimation error!

Experimental results

Test setup

Anti-islanding strategies

3 kW IGBT full-bridge inverter , TMS430F24xx DSP controller (40 μs computation time)
LCL filter resonance freq = 4.25kHz, Ud = 370 V, Ug = 230 V rms, Kp=2, Ki=300, fs=8.5kHz

Experimental results

3 kW PV inverter

Anti-islanding strategies



Non-continuous injection of the harmonic into the grid.

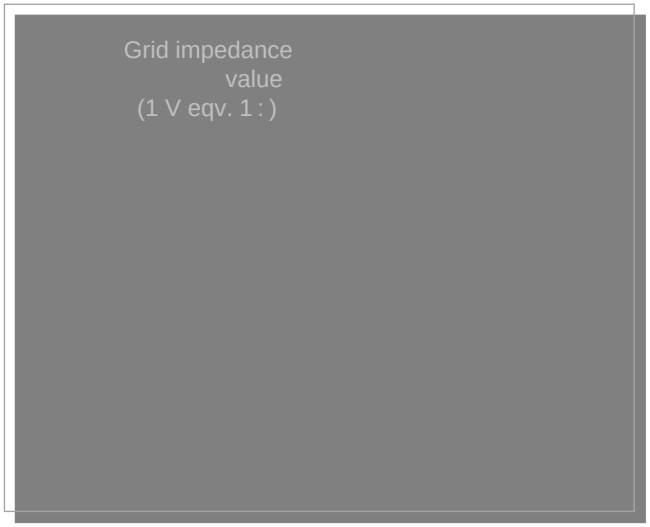

Impedance estimation when the PV current is changing from P=0.3 kW to P=3 kW. The result is filtered every 1 s

Non-continuous injection of the harmonic. Estimation is checked for different power levels

Experimental results

3 kW PV inverter

Detection of both resistive and inductive impedance jump!

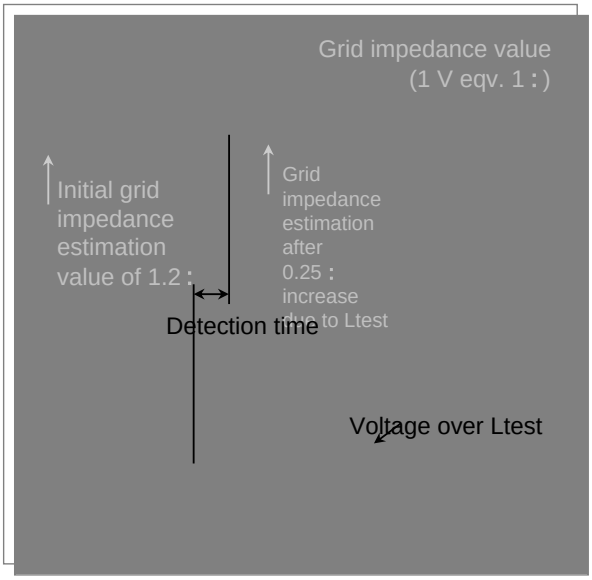

Dynamic response of the method detecting a 0.8 mH inductive increase of the grid impedance.

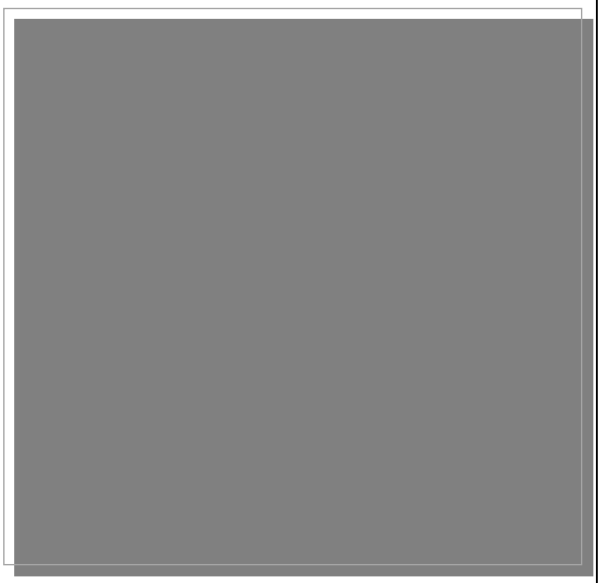

Dynamic response of the method detecting 0.5 Ω resistive increase.

Anti-islanding strategies

Experimental results

Anti-islanding strategies

The error is increasing at lower harmonic levels. But still can detect 0.5 ohms jump!

Conclusions

Anti-islanding is a requirement for DPGS

Software Anti-islanding methods are possible

The algorithm can be easilly implemented in the ”existing” DSP control platform and is not requiring extra hardware

For Anti-Islanding standard (IEC61727/IEEE929 frequency or voltage feedback methods can be used in both single-phase or three-phase systems in combination with passive methods to obtain minnimum NDZ.

For ENS standard, harmonic injection can be used

References

[1] IEEE Std 929-2000 – IEEE Recommend ed Practice for Utility Interface of Photovoltaic (PV) Sy stems,2000, ISBN 0-7381-1934-2

[2] IEC 61727 CDV Ed.2 – Characteris tics of the Utility Interface for Photovoltaic (PV) Systems, 2002

[3] IEEE Std 1547 – IEEE Standard for Interconnecting Distributed Resources with Electric Power Systems,2003, ISBN 0-7381-3720-0

[4] EN 50330-1 – Utility Interactive Fa ile Save Protective Interface for PV-Line Commutated Converte rs, Copyright OVE/ON, 1999

[5] Evaluation of Islanding Detectio n Methods for Photovoltaic Utility Interactive Power Systems - Task V, Report IEA-PVPS T5-09: 2002 March 2002, www.iea.org

[6] G.A.Smith, I?A.Onions and D.G. Infield, "Predicting islanding operation of grid connected PV in verters", IEE Proc.-Electr. Power Appl., Vol. 147, No. 1. January 2000

[7] Asiminoaie L.,Teodorescu,R., Blaabjerg,F., Borup,U. – “A Digital Controlled PV-Inverter with Grid Impedance Estimation for ENS Detection ” IEEE Trans on PE 2005.

Anti-islanding strategies

Grid Converters and their Control in DPGS, Tutorial IECON'05, IV-Control of Single-Phase PV Systems

A Distributed Power Generation System: Wind Power Generation Systems

Zhe Chen

Institute of Energy Technology
Aalborg University, Denmark

Outline

Wind turbine system

Power Conversion

- Fixed speed system
- Variable speed system

Power Converters

Requirements of connecting wind power systems

Wind turbine system

Basic power conversion:

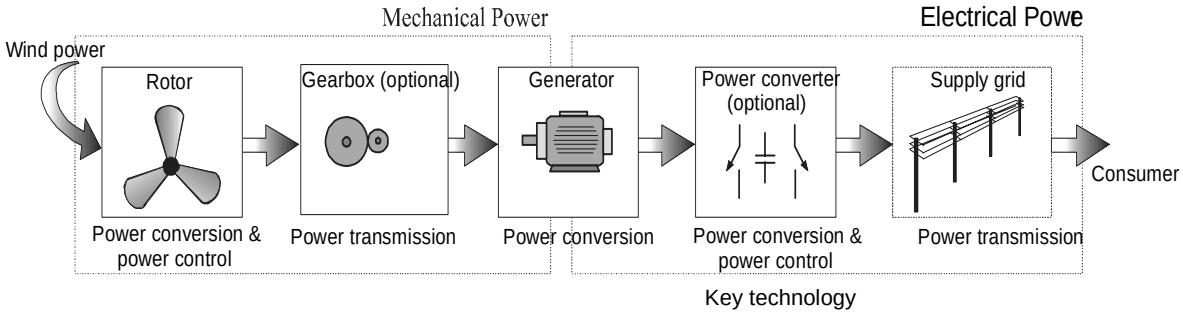

Wind turbine systems

Nacelle in wind turbine

Vestas V80-2 MW

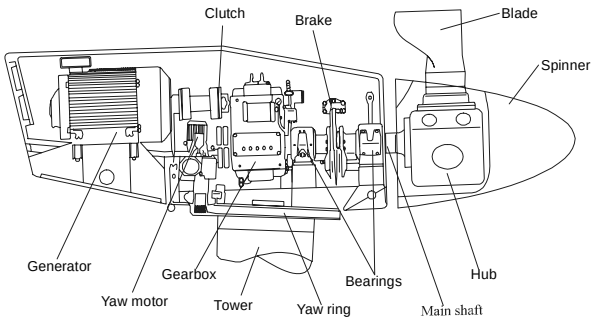

- Example of technology

Wind turbine system

Power Control

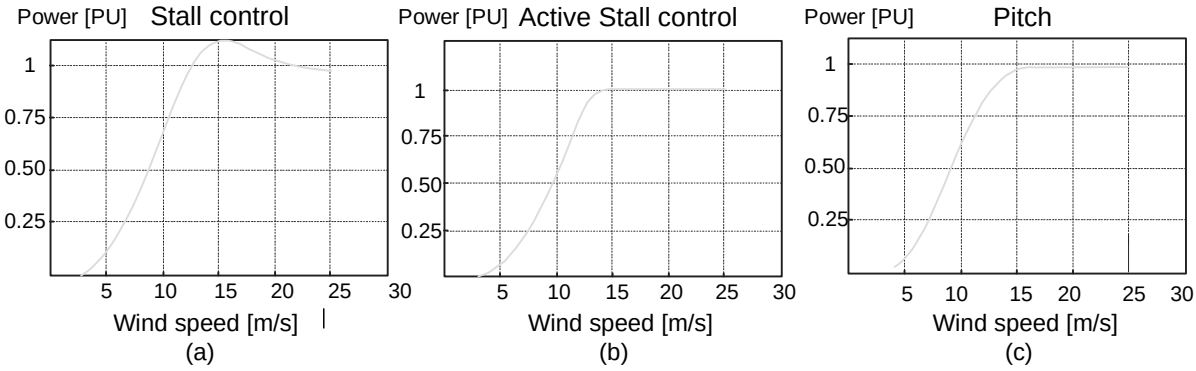

Power curves from different wind turbines

Wind turbine system

Power curve - Aerodynamic

¾ Power to the generator- shaft is given by:

$$P_{tur} = \frac{1}{2} C_p A \, v v_{wind}^3$$

$$= \frac{v_{tip}}{v_{wind}} = \frac{r_{rt} \quad rt}{v_{wind}}$$

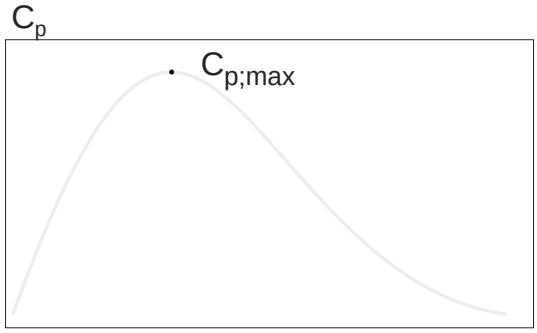

= ratio between tip-speed and wind speed

Wind turbine systems

Basic topology for wind turbine (I, II, III)

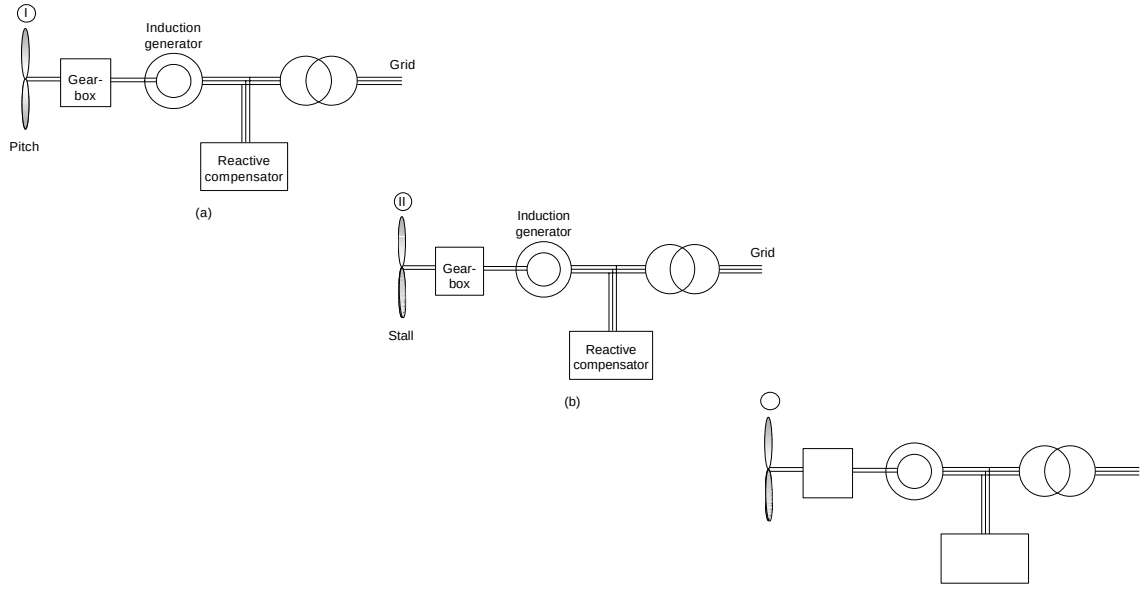

- Fixed speed with capacitor bank (Reactive power)

Wind turbine systems

¾ Shift between number of poles

¾ ”Variable speed with 1 bit resolution”

Poles	50 Hz grid (rpm)
2	3000
4	1500
6	1000
8	750
10	600
12	500

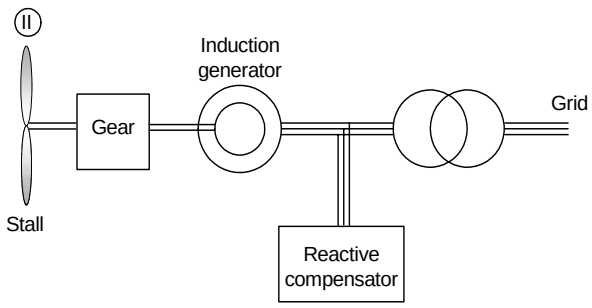

Wind turbine systems

- Higher speed range
- Lower mechanical stress
- Less grid pulsations
- Improvement in Optislip (no rings)

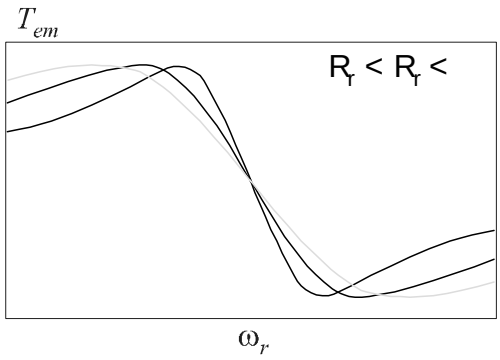

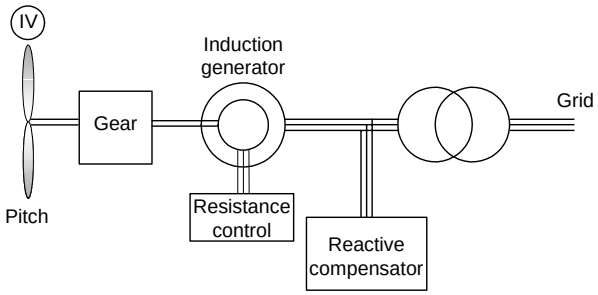

Wind turbine systems

- Limited speed range (-30% to +20%, typical)
- Small-scale power converter (Less power losses, price)
- Complete control of active P_{ref} and reactive power Q_{ref}

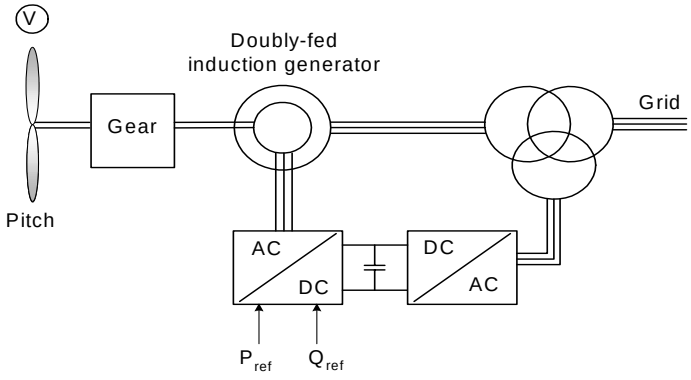

Wind turbine systems

- Full speed range
- No brushes on the generator
- Complete control of active og reactive power
- Proven technology

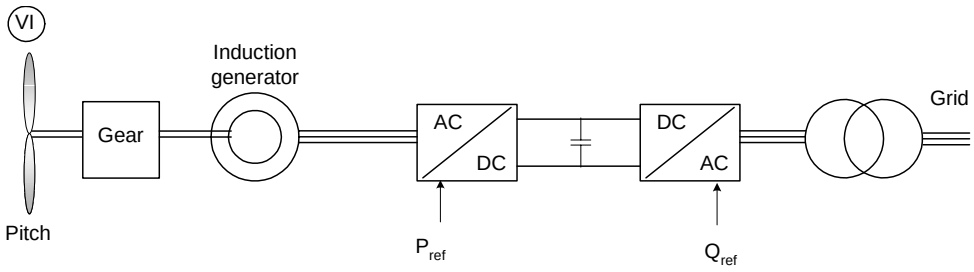

Wind turbine systems

- Full speed range
- Possible to avoid gear (multi-pole generator)
- Complete control of active and reactive power

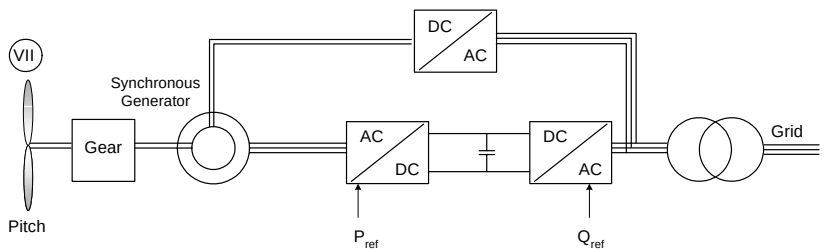

Wind turbine systems

- Full speed range
- Without gear (multi-pole generator)
- Complete control of active and reactive power

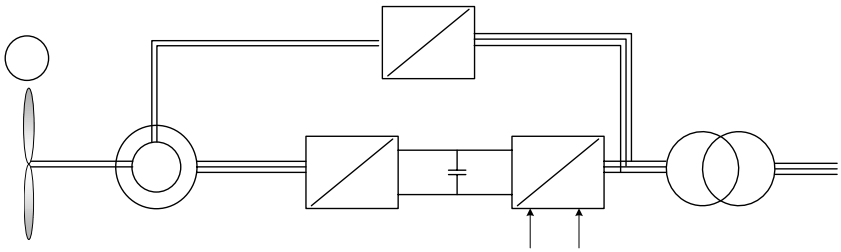

Wind turbine systems

- Full speed range
- Multi-pole generator
- Complete control of active and reactive power
- Brushless (reduced maintenance)
- No power converter for field (higher efficiency)

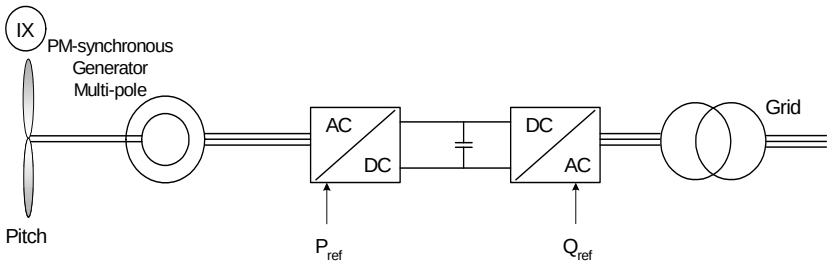

nchr
Gene

Wind turbine systems

Comparison of topologies

System comparison of wind turbines									
System	I	II	III	IV	V	VI	VII	VIII	IX
Variable speed	No	No	No	No	Yes	Yes	Yes	Yes	Yes
Control active power	Limited	No	Limited	Limited	Yes	Yes	Yes	Yes	Yes
Control reactive power	No	No	No	No	Yes	Yes	Yes	Yes	Yes
Short circuit (fault-active)	No	No	No	No	No/Yes	Yes	Yes	Yes	Yes
Short circuit power	contribute	contribute	contribute	contribute	contribute	limit	limit	limit	limit
Control bandwidth	1-10 s	1-10 s	1-10 s	100 ms	1 ms	0.5-1 ms	0.5-1 ms	0.5-1 ms	0.5-1 ms
Standby function	No	No	No	No	Yes +	Yes ++	Yes ++	Yes ++	Yes ++
Flicker (sensitive)	Yes	Yes	Yes	Yes	No	No	No	No	No
Softstarter needed	Yes	Yes	Yes	Yes	No	No	No	No	No
Rolling capacity on grid	Yes, partly	No	Yes, partly	Yes, partly	Yes	Yes	Yes	Yes	Yes
Reactive compensator (C)	Yes	Yes	Yes	Yes	No	No	No	No	No
Island operation	No	No	No	No	Yes/No	Yes/No	Yes/No	Yes/No	Yes
Investment	++	++	++	++	+	0	0	0	0
Maintenance	++	++	++	++	0	+	+	+	+

• Power electronics now enables wind energy as a power source

Market share of 2001

Design Concept	World-Market Share	Market Share Germany
Fixed speed (Stall or active stall regulation, fixed speed operation, gearbox, pole-switchable asynchronous	23%	22%
Dynamic slip contro (Limited variable speed, pitch regulation, gearbox, pole-switchable asynchronous generators with variable slip)	11%	0%
Doubly-fed generator (Variable speed operation, pitch control, gearbox, double-fed generator utilizing power electronics in the inverter)	50%	49%
Direct-driven variable speed synchronous (generators with large-diameter synchronous ring generator, including pitch control, but no gearbox, utilizing power electronics in the inverter)	16%	29%
Total	100%	100%

Power Converters

Topologies for IG & DFIG:

- Back-to-back two-level voltage source converter

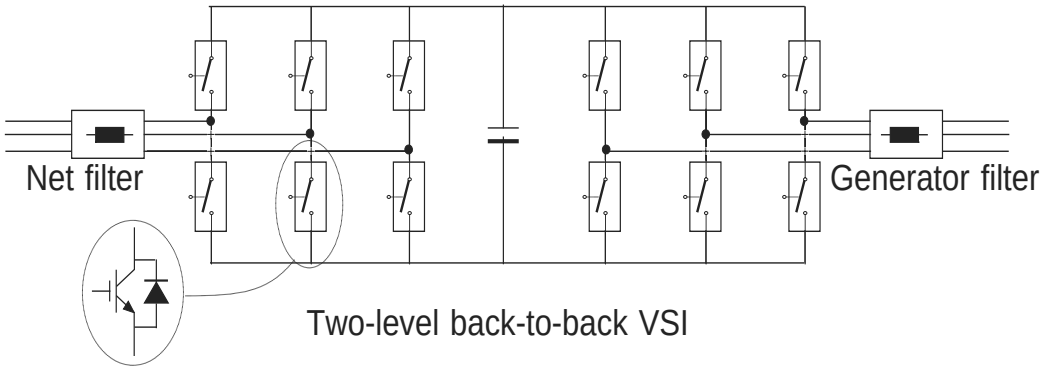

Proven technology from ASD

Power Converters

Topologies for IG & DFIG:

Voltage and currents

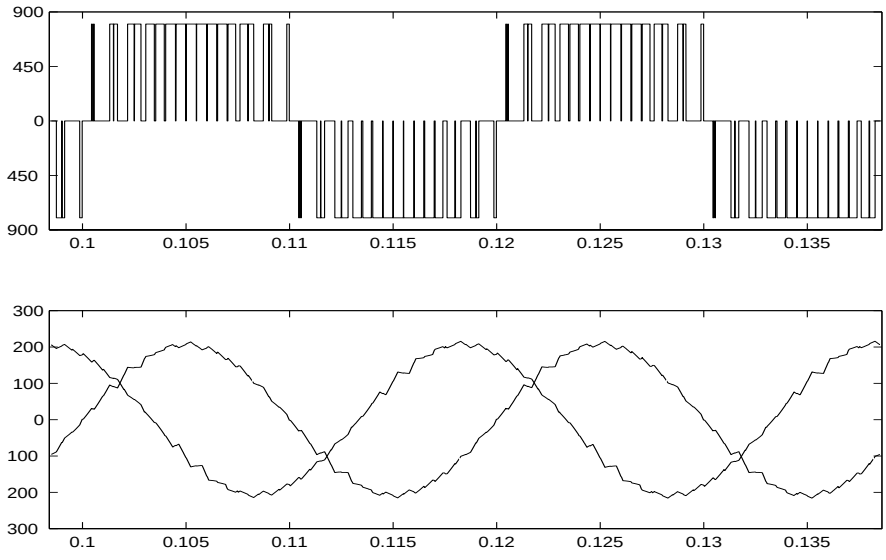

Power Converters

Topologies for IG & DFIG:

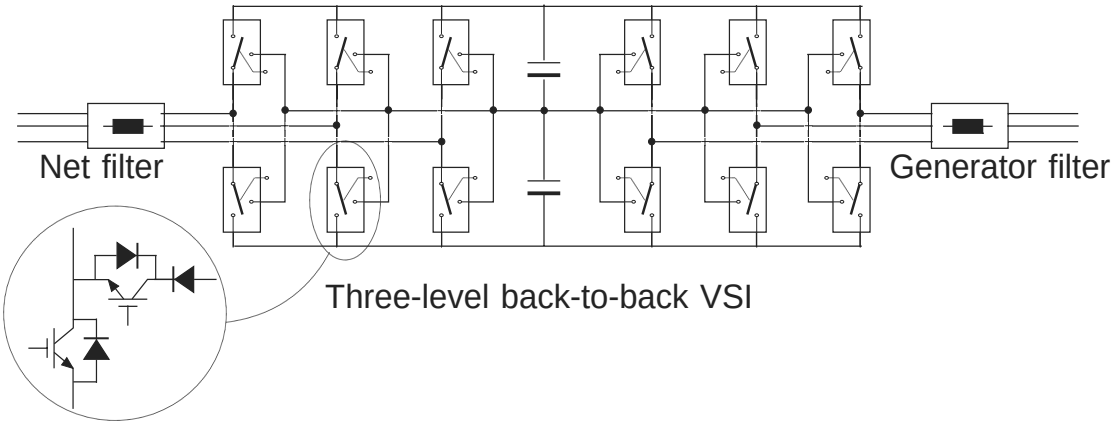

- Back-to-back three-level voltage source converter

Power Converters

Topologies for IG & DFIG:

Voltage and currents of three-level voltage source converter

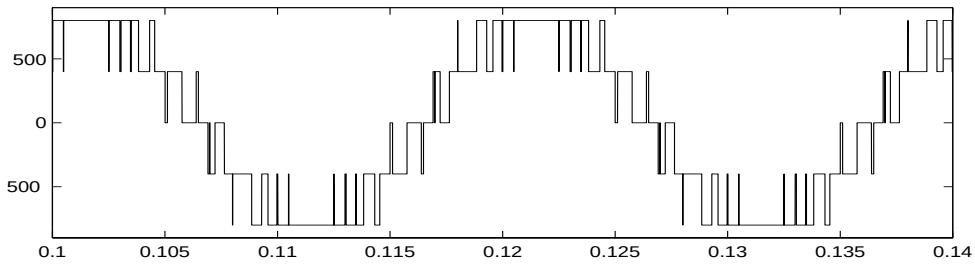

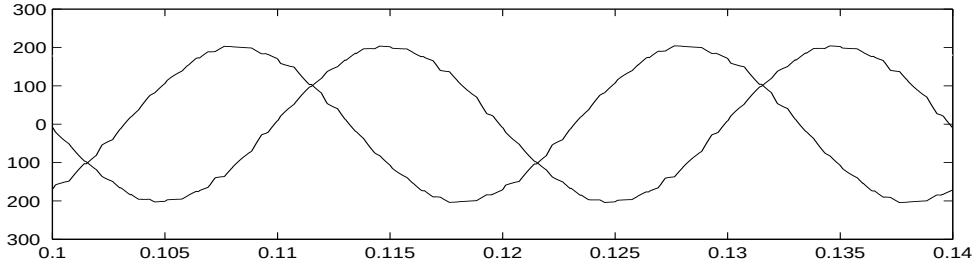

Power Converters

Topologies for IG & DFIG:

- Matrix converter

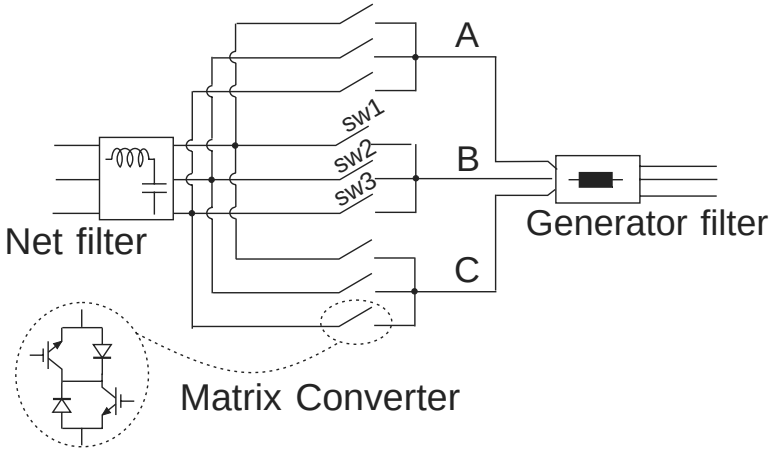

Power Converters

Topologies for IG & DFIG:

Input and output voltages andcurrents of matrix converter

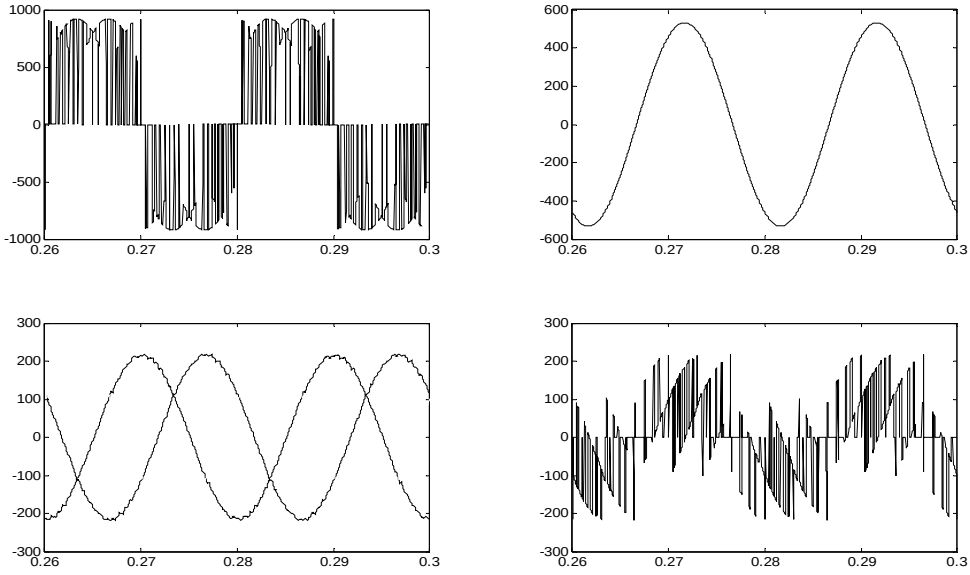

Power Converters

Topologies for SG & PMSG:

- Two-level inverter and boost-rectifier

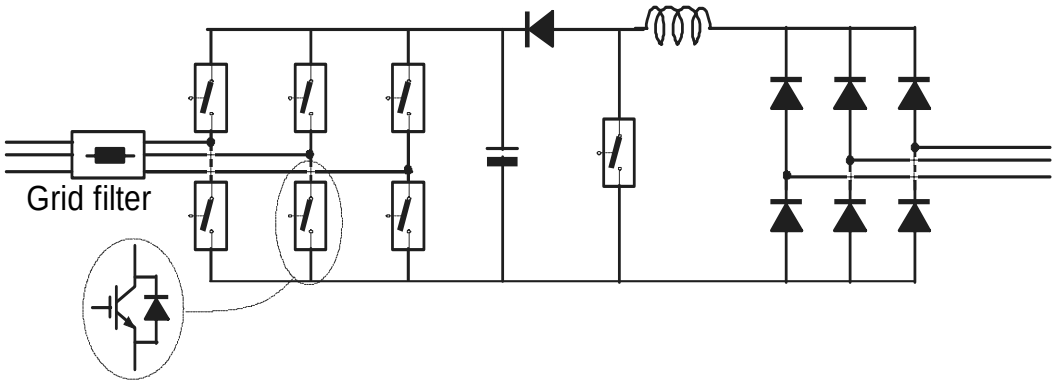

Requirements to wind turbines

Operate a wind farm/wind turbine like a power station/plant

Grid Code: Technical document containing the rules governing the operation, maintenance, & development of the system

- Steady state
  - Voltage support/reactive power compensation
  - Frequency /Power control
    - Low/high frequency support
  - Power Quality, flicker, harmonics
- Transient /dynamic state
  - Fault ride through, to stay connected during low voltage on the grid
  - Ramp rate
- Communication /power dispatch
  - Reliable communication
  - Wind forecasting
  - Participate power market

Requirements to wind turbines

Reactive power control

Requirements to wind turbines

Voltage tolerance

Voltage and frequency requirements

Techincal Regulations TF 3.2.6 (Eltra, Elkraft)

Frequency and power control

Techincal Regulations TF 3.2.6 (Eltra, Elkraft)

Reactive power

Requirements for wind turbine interaction with the grid during grid faults

Requirements for wind turbine interaction with the grid during grid faults

In all operational situations the wind farm shall be able to withstand the following faults sequences without being disconnected (does not apply to radial connected wind turbines):

- A Three-phase fault on a random line or transformer with definitive disconnection without any attempt at reclosing.
  - CT=0 3-phase short circuit
  - CT=100 ms typical disconnection of the fault
- A Two-phase fault on a random line with unsuccessful reclosing
  - CT=0 2-phase short circuit
  - CT=100-150 ms Typical disconnection of fault and the line at transmission
  - CT=400-450 ms automatic reclosing
  - CT=500-950 ms disconnection of the fault (may be shorter around 100ms for distribution)
- A Withstand 3 faults within 2 minutes
- A Withstand 6 faults if delay between faults are 5 minutes

Control of three-phase inverters for wind systems

by Marco Liserre, Polytechnic of Bari, Italy

Agenda

- Current control of three-phase grid-side inverters
- Stability for a large set of grid impedance values
- Operation under unbalance condition or during voltage dips
- Grid synchronization

Power system

Control of three-phase inverters for wind systems

by Marco Liserre, Polytechnic of Bari, Italy

Agenda

- Current control of three-phase grid-side inverters
- Stability for a large set of grid impedance values
- Operation under unbalance condition or during voltage dips
- Grid synchronization

Grid connection issues

- Countries with background in renewable energy imposing more demands on grid connection
  - DPGS should run over small grid fluctuations
    - Voltage level
    - Frequency level
  - DPGS should sustain the grid when necessary
  - DPGS should contribute to reactive power control when requested

Grid filter, dq-frame model

L-filter grid connection

LCL-filter grid connection

- In a dq-frame rotating at the line pulsation

$$\begin{cases} -\dfrac{di_d}{dt} = \omega i_q - \dfrac{1}{L} R i_d - e_d + \dfrac{1}{2} p_d v_o \\ -\dfrac{di_q}{dt} = \omega i_d - \dfrac{1}{L} R i_q - e_q + \dfrac{1}{2} p_q v_o \end{cases}$$

$$\frac{d}{dt}\begin{bmatrix} i_{1d} \\ i_{1q} \\ v_{C_f d} \\ v_{C_f q} \\ i_{2d} \\ i_{2q} \end{bmatrix} = \begin{bmatrix} -\frac{R_1}{L_1} & \omega & \frac{1}{L_1} & 0 & 0 & 0 \\ -\omega & -\frac{R_1}{L_1} & 0 & \frac{1}{L_1} & 0 & 0 \\ \frac{1}{C_f} & 0 & 0 & \omega & -\frac{1}{C_f} & 0 \\ 0 & \frac{1}{C_f} & -\omega & 0 & 0 & -\frac{1}{C_f} \\ 0 & 0 & \frac{1}{L_2} & 0 & -\frac{R_2}{L_2} & \omega \\ 0 & 0 & 0 & \frac{1}{L_2} & -\omega & -\frac{R_2}{L_2} \end{bmatrix} \begin{bmatrix} i_{1d} \\ i_{1q} \\ v_{C_f d} \\ v_{C_f q} \\ i_{2d} \\ i_{2q} \end{bmatrix} + \begin{bmatrix} \frac{1}{L_1} & 0 & 0 \\ 0 & \frac{1}{L_1} & 0 \\ 0 & 0 & 0 \\ 0 & 0 & 0 \\ 0 & 0 & \frac{1}{L_2} \\ 0 & 0 & 0 \end{bmatrix} \begin{bmatrix} -e_d \\ -e_q \\ v_o \end{bmatrix} + \begin{bmatrix} 0 & 0 \\ 0 & 0 \\ 0 & 0 \\ 0 & 0 \\ 0 & 0 \\ \frac{1}{L_2} & 0 \end{bmatrix} \begin{bmatrix} p_d \\ p_q \end{bmatrix} v_o$$

Marco Liserre liserre@ieee.org

Cascade control

Marco Liserre liserre@ieee.org

Direct Power Control

Current control in a rotating frame

$$D_{PI}(s)_{dq} = \begin{bmatrix} K_p + \frac{K_i}{s} & 0 \\ 0 & K_p + \frac{K_i}{s} \end{bmatrix}$$

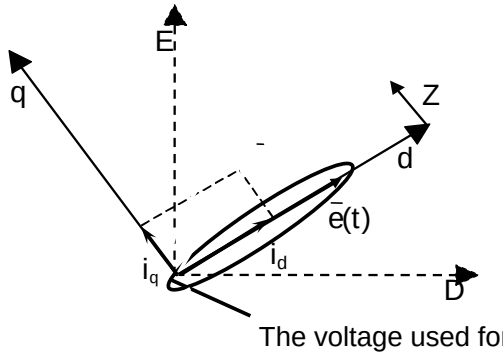

The voltage used for the dq-frame orientationcould be measured after a dominant reactance

From PI in a rotating frame to P+res for each phase

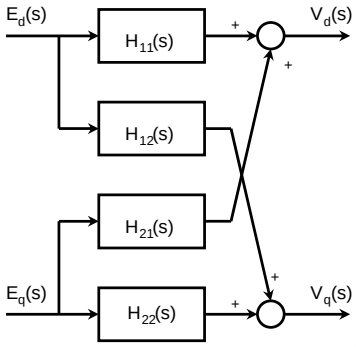

In the hypothesis

$$H_{11}(s)=H_{22}(s)=K_p\frac{K_i}{s}$$

$$H_{12}(s)=H_{21}(s)=0$$

$$\begin{cases} v_d(t) \;\; h_{11}(t) \;\; e_d(t) \\ v_q(t) \;\; h_{22}(t) \;\; e_q(t) \end{cases}$$

$$G_c^{(d,q)} \begin{bmatrix} K_p\frac{K_i}{s} & 0 \\ 0 & K_p\frac{K_i}{s} \end{bmatrix} \Leftrightarrow G_c^{(abc)}(s) \frac{2}{3}\begin{bmatrix} K_p\frac{K_i s}{s^2+\omega_0^2} & \frac{K_p}{2}\frac{K_i s+\sqrt{3}K_i\omega_0}{2(s^2+\omega_0^2)} & \frac{K_p}{2}\frac{K_i s-\sqrt{3}K_i\omega_0}{2(s^2+\omega_0^2)} \\ \frac{K_p}{2}\frac{K_i s-\sqrt{3}K_i\omega_0}{2(s^2+\omega_0^2)} & K_p\frac{K_i s}{s^2+\omega_0^2} & \frac{K_p}{2}\frac{K_i s+\sqrt{3}K_i\omega_0}{2(s^2+\omega_0^2)} \\ \frac{K_p}{2}\frac{K_i s+\sqrt{3}K_i\omega_0}{2(s^2+\omega_0^2)} & \frac{K_p}{2}\frac{K_i s-\sqrt{3}K_i\omega_0}{2(s^2+\omega_0^2)} & K_p\frac{K_i s}{s^2+\omega_0^2} \end{bmatrix}$$

Grid Converters and their Control in DPGS, Tutorial IECON'05,
V-Control of three-phase inverters for wind systems

From PI in a rotating frame to P+res for each phase

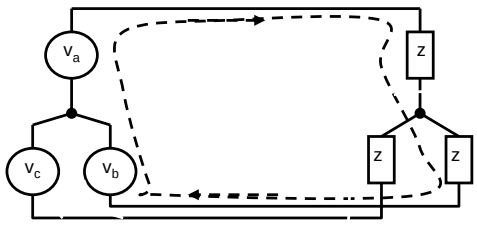

$$\frac{d}{dt}\begin{bmatrix} i_a(t) \\ i_b(t) \end{bmatrix} = \frac{1}{L}\begin{bmatrix} -R & 0 \\ 0 & -R \end{bmatrix}\begin{bmatrix} i_a(t) \\ i_b(t) \end{bmatrix} + \frac{1}{3}\begin{bmatrix} 2 & -1 \\ -1 & 2 \end{bmatrix}\begin{bmatrix} v_a(t) \\ v_b(t) \end{bmatrix}$$

$$\text{if } v_a(t)+v_b(t)+v_c(t)=0$$

$$\frac{d}{dt}\begin{bmatrix} i_a(t) \\ i_b(t) \end{bmatrix} = \frac{1}{L}\begin{bmatrix} -R & 0 \\ 0 & -R \end{bmatrix}\begin{bmatrix} i_a(t) \\ i_b(t) \end{bmatrix} + \begin{bmatrix} 1 & 0 \\ 0 & 1 \end{bmatrix}\begin{bmatrix} v_a(t) \\ v_c(t) \end{bmatrix}$$

$$G_c^{(abc)}(s) \frac{2}{3}\begin{bmatrix} K_p\frac{K_i s}{s^2+\omega_0^2} & \frac{K_p}{2}\frac{K_i s+\sqrt{3}K_i\omega_0}{2(s^2+\omega_0^2)} & \frac{K_p}{2}\frac{K_i s-\sqrt{3}K_i\omega_0}{2(s^2+\omega_0^2)} \\ \frac{K_p}{2}\frac{K_i s-\sqrt{3}K_i\omega_0}{2(s^2+\omega_0^2)} & K_p\frac{K_i s}{s^2+\omega_0^2} & \frac{K_p}{2}\frac{K_i s+\sqrt{3}K_i\omega_0}{2(s^2+\omega_0^2)} \\ \frac{K_p}{2}\frac{K_i s+\sqrt{3}K_i\omega_0}{2(s^2+\omega_0^2)} & \frac{K_p}{2}\frac{K_i s-\sqrt{3}K_i\omega_0}{2(s^2+\omega_0^2)} & K_p\frac{K_i s}{s^2+\omega_0^2} \end{bmatrix} \Leftrightarrow G_d^{(abc)}(s)$$

Marco Liserre liserre@ieee.org

Results

Three-phase prototype at Polytechnic of Bari

Tests made under ideal sinusoidal and balanced grid conditions

Results (ideal grid conditions)

PI controller in a rotating frame

harmonic spectrum current error

P+resonant controller for each phase

harmonic spectrum current error

Current control in a stationary frame

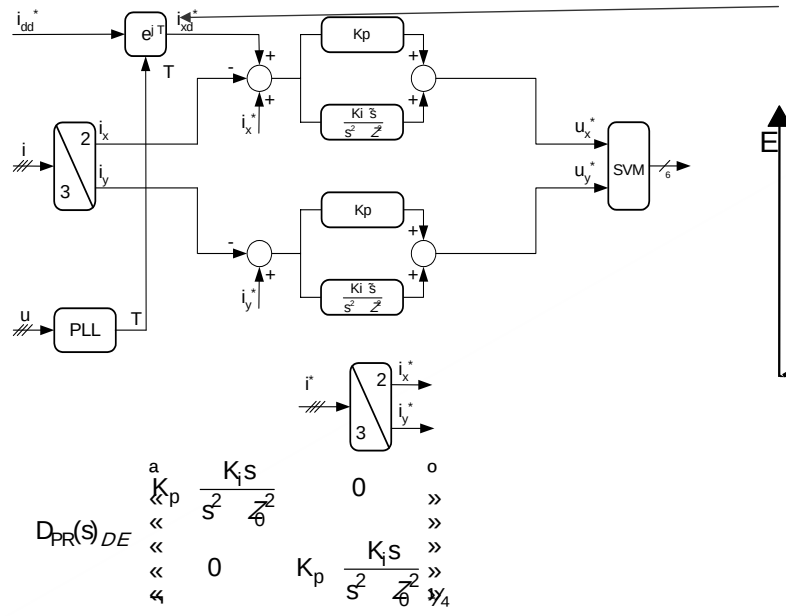

The voltage used for reference generation could be measured after a dominant reactance

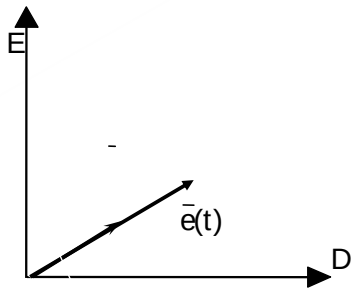

$$D_{PR}(s)_{DE} = \begin{bmatrix} K_p + \frac{K_i s}{s^2 + \omega_0^2} & 0 \\ 0 & K_p + \frac{K_i s}{s^2 + \omega_0^2} \end{bmatrix}$$

Use of grid voltage harmonic compensators

$$G_R(s)_{DE} = \sum_{h=3,5,7} k_{ih} \frac{s}{s^2 + (\omega_0 h)^2}$$

the harmonics to be compensated should be within the bandwidth of the current controller otherwise stability problems may arise

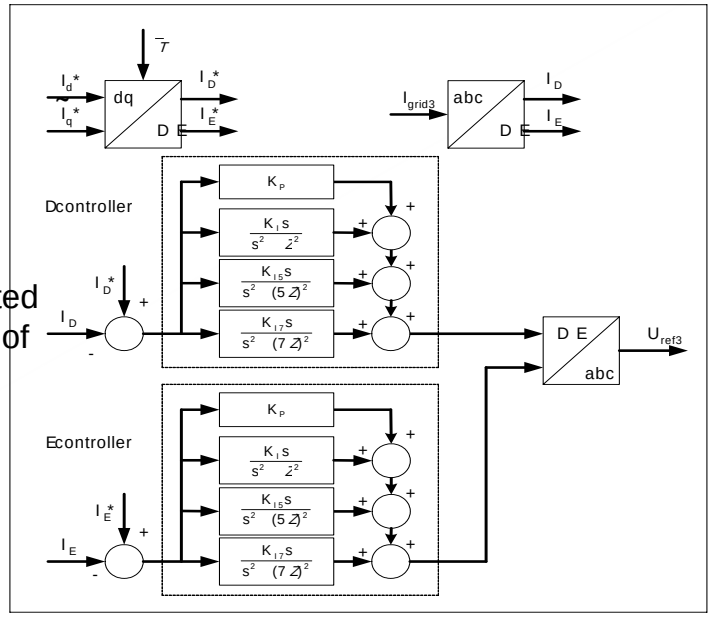

Results

Three-phase prototype at Aalborg University

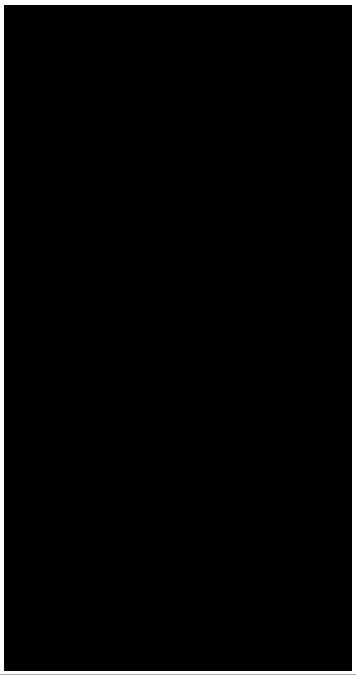

Results (grid voltage background distortion)

Effect of the grid voltage background distortion on the currents

Use of harmonic compensators

Results (equivalence of PI dq and P+resin DE

PI controller in a rotating frame

triggering LCL-filter resonance

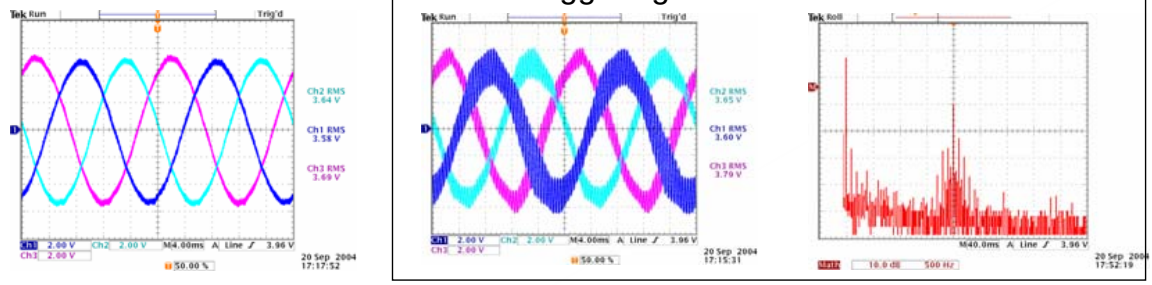

P+resonant in stationary frame

triggering LCL-filter resonance

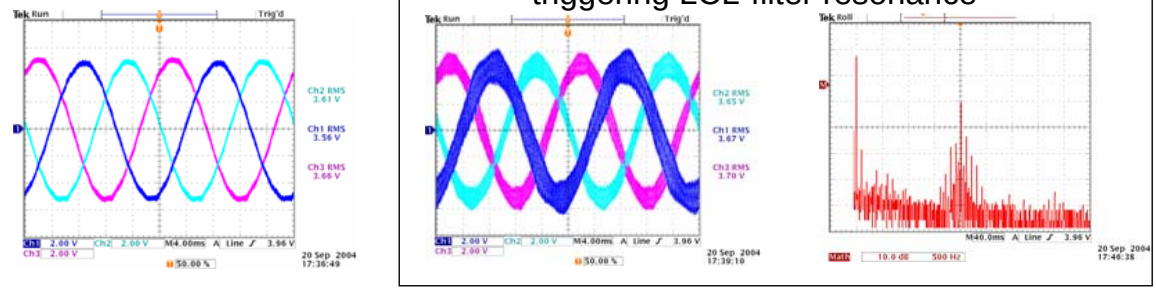

Damping of LCL-filter resonance

- If a LCL-filter is used the stability has to be verified

$$\frac{i(s)}{v(s)} \quad \frac{1}{L_2 s} \frac{s^2 \quad z_{LC}^2}{s^2 \quad z_{res}^2} \qquad \frac{i_g \ s}{v \ s} \quad \frac{1}{Ls} \frac{z_{LC}^2}{s^2 \quad z_{res}^2}$$

- To stabilize the current loop against LCL-filter resonance:
  - passive damping (resistor -> losses)
  - active damping:
    - multiloop (use of more sensors)
    - notch filter in cascade to the main controller

Damping of LCL-filter resonance: passive

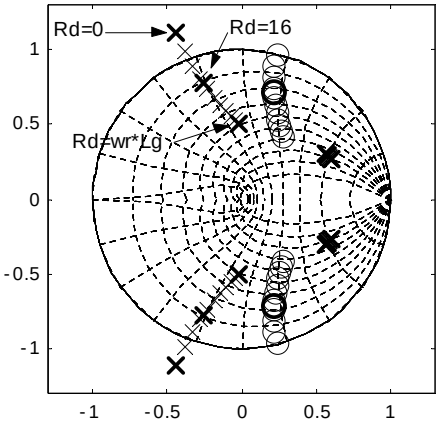

- Increasing the switching/sampling frequency, the losses decrease but at the same time the damping becomes less effective

Damping of LCL-filter resonance: passive

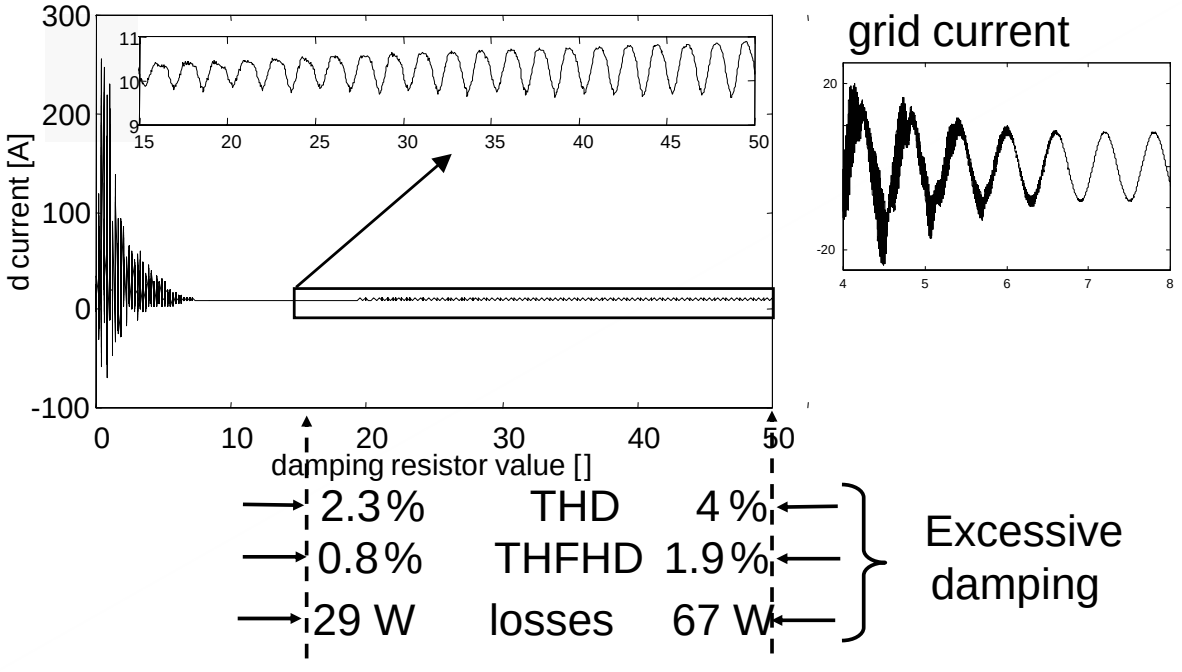

Damping of LCL-filter resonance: active

- multiloop (use of more sensors)
- notch filter in cascade

Active damping with notch filter

undamped

$$G_{AD}(z) = \frac{a(z^2 - 2z_0 + z_0^2)}{(z^2 - 2p_0 + p_0^2)}$$