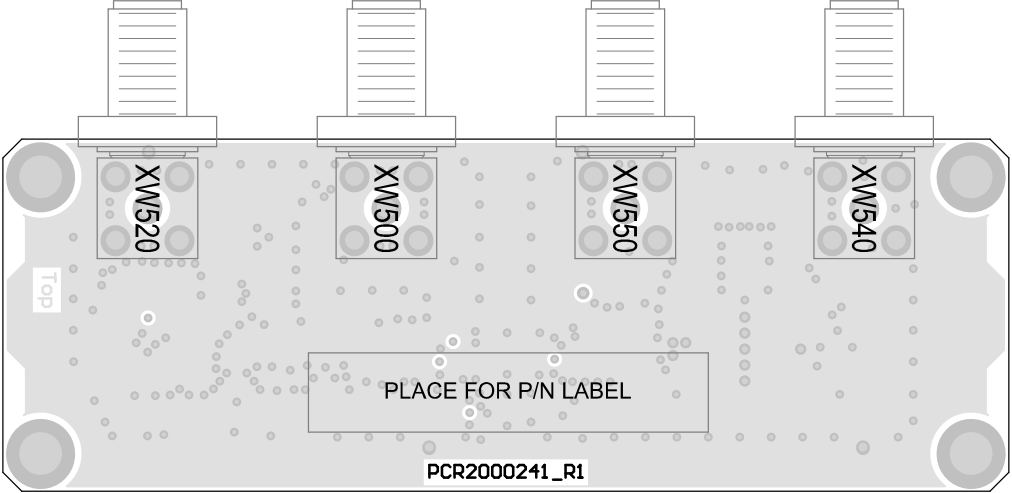
XW520
XW500
XW550
XW540
Top
PLACE FOR P/N LABEL
PCR2000241_R1

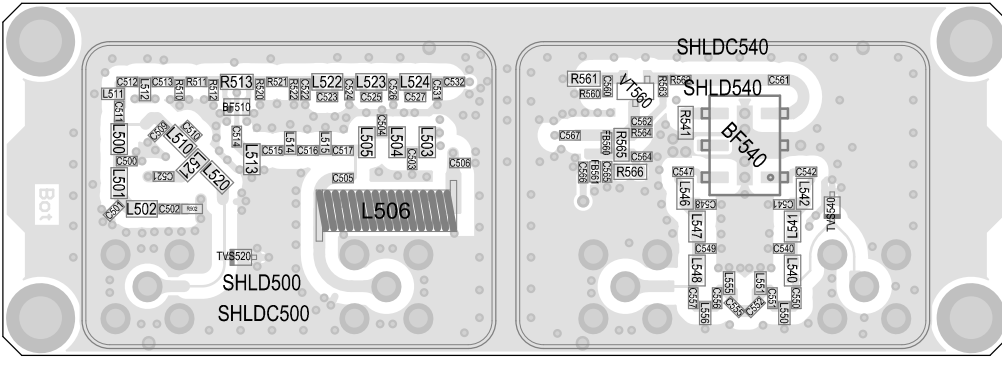
Bot
C512
L572
C513
R511
C510
R512
R513
R521
R520
L522
L523
C532
L524
C531
C527
C526
C525
C524
C522
C523
C521
L511
C511
BF510
L500
C508
C510
C509
C514
C515
C516
C517
C507
C504
L505
L504
L503
C506
C503
C500
L513
L510
V510
L520
C502
L501
C501
L502
C502 fixe
C505
L506
TVS520
SHLD500
SHLDC500
SHLDC540
R561
V1560
R560
R563
R562
C561
SHLD540
C569
R541
C562
C567
R564
BF540
R565
C564
C560
C555
C559
C558
R566
C547
C542
L546
C546
C548
L542
C541
TVS540
L547
L541
C549
C540
L548
L540
C555
C556
C554
C551
C550
C557
C558
C553
C552
C556

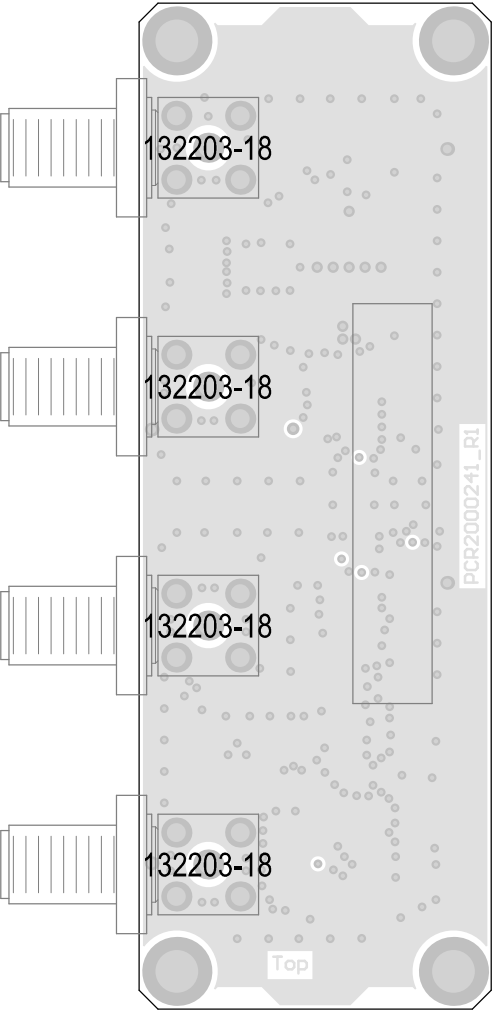
132203-18
132203-18
132203-18
132203-18
PCR2000241_R1
Top

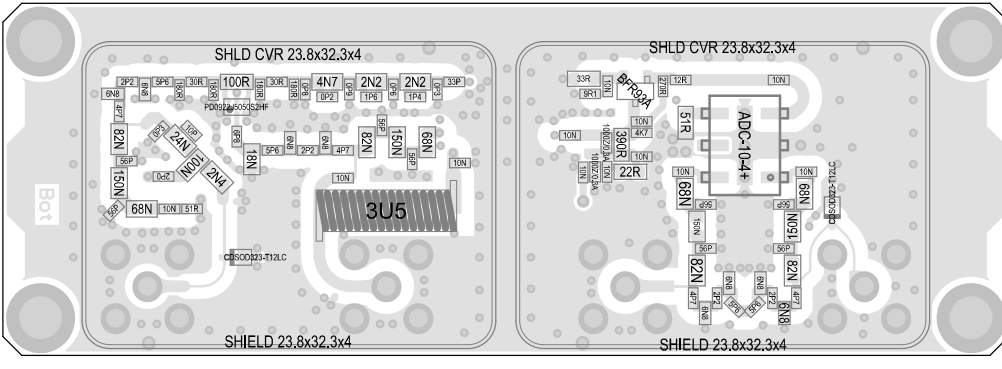
SHLD CVR 23.8x32.3x4
100R
4N7
2N2
2N2
33P
2P2
5P6
30R
6N8
4P7
82N
24N
100N
2N4
18N
150N
68N
3U5
51R
PD0224-5055S2HF
CBSOD323-T12LC
SHIELD 23.8x32.3x4
Bot
SHLD CVR 23.8x32.3x4
33R
12R
10N
BFR93A
51R
ADC-10-44+
390R
4K7
22R
68N
56P
150N
82N
4P7
2P2
6N8
SHIELD 23.8x32.3x4