Low cost 12 (6) channels front end amplifier for Pt100 RTD sensors

Input – Pt100 sensors –50 .. +120 degree Cel. (80–145 ohm)
Output 2.9V @ –50 degree and 0.1V @ 120 degree

Autocalibration with 82 and 130 ohm
resistors for gain and offsets compernsation

Maximal total Pt100 cable resistance for all sensors <500 ohm
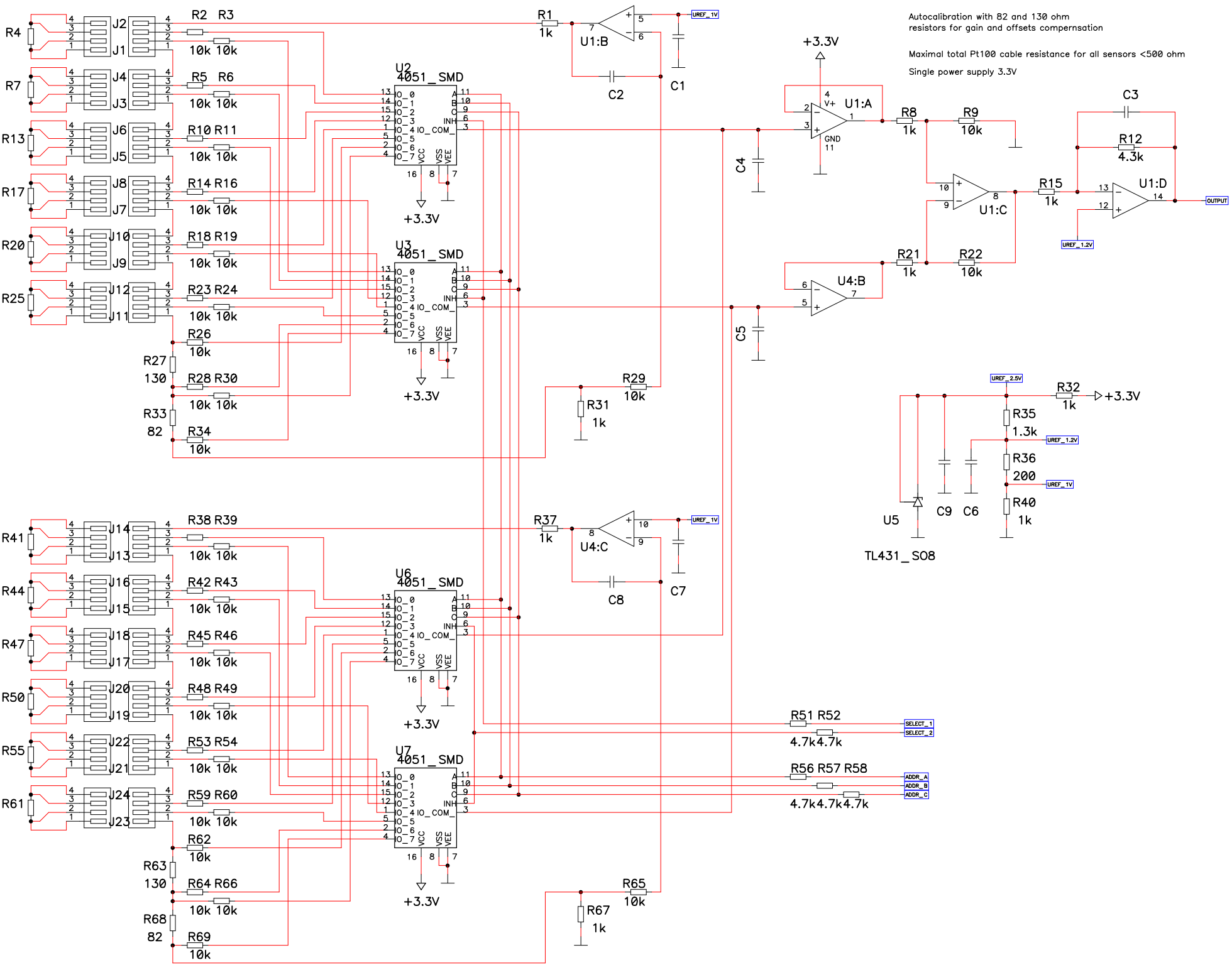
Single power supply 3.3V