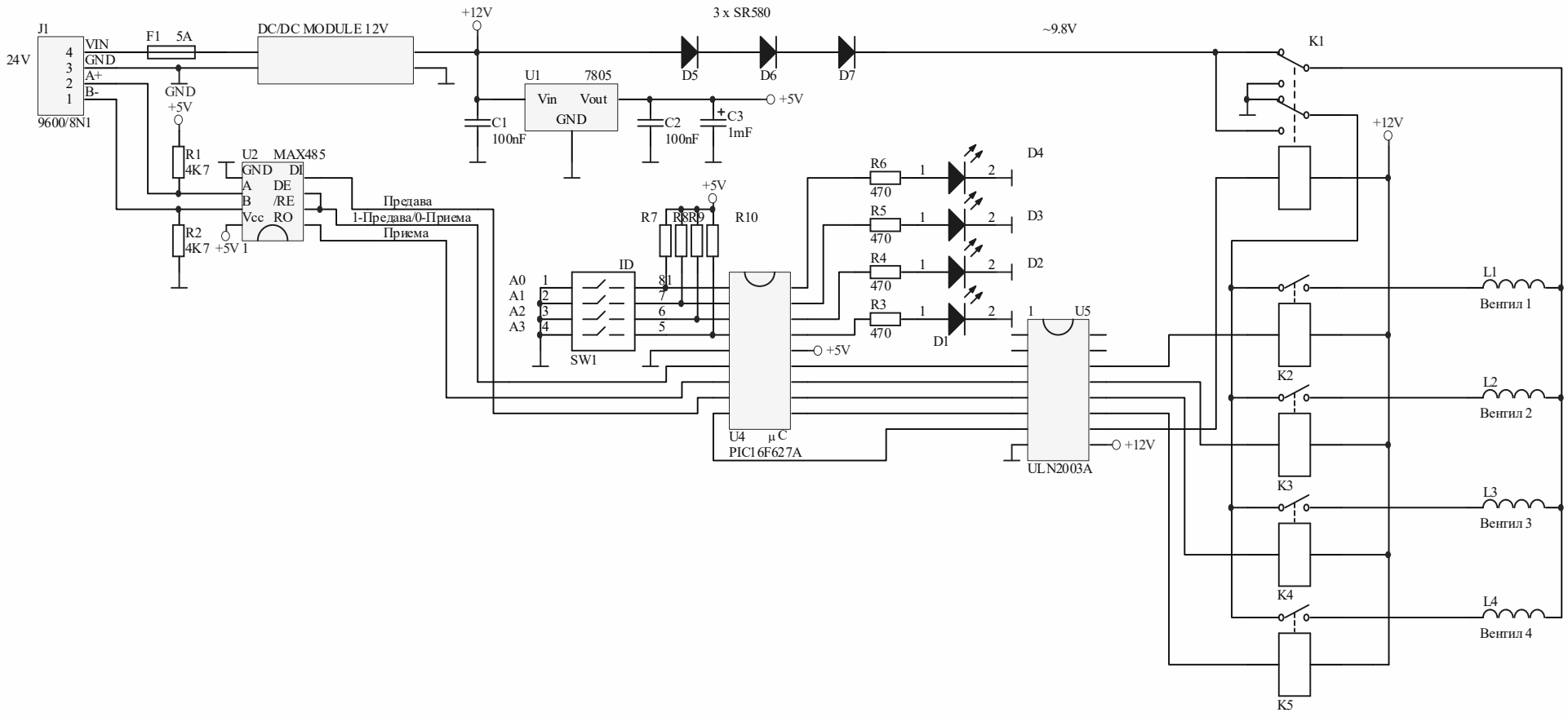

Title	***MODBUS STANDART***		*Altium Limited* *L3, 12a Rodborough Rd* *Frenchs Forest* *NSW* *Australia 2086*
Size: A4	Number:	Revision:	
Date: 30.8.2019 г.	Time: 11:37:19	Sheet 0 of 0	
File: D:\proekti\evksinograd\ModbusModified.SCHDOC			